LOCATION OF CONTROLS - EMPLACEMENT DES REGLAGES - SERVICE LAGEPLAN
POSIZIONE REGOLATORI DI SERVIZIO - SITUACIÓN DE LOS AJUSTES

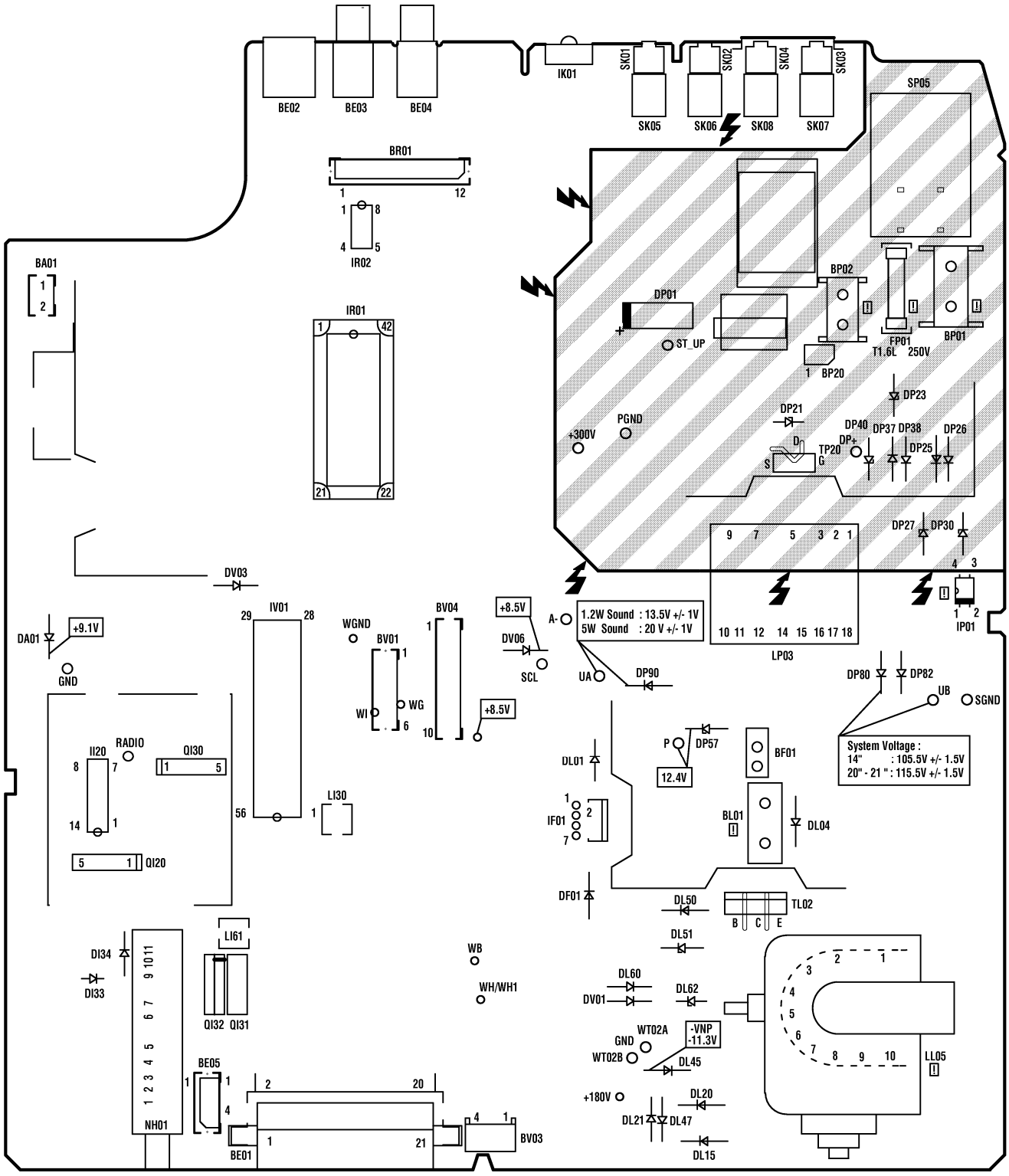

Part of board connected to mains supply.
Partie du châssis reliée au secteur.
Primärseite des Netzteils.
Parte dello châssis collegata alla rete.
Parte del chasis conectada a la red.

⚠ Use isolating mains transformer -
Utiliser un transformateur isolateur du secteur -
Trenntrafo verwenden -
Utilizar un transformador aislador de red -
Utilizzare un transformatore per isolarvi dalla rete

ADJUSTMENTS - REGLAGES - EINSTELLUNGEN - REGOLAZIONE - AJUSTES

U G2 / cutoff	SCREEN	Peak white pattern. ☼ + ◑ + ◔ = 50%		Adjust Screen voltage VG2 120V +/- 5V: 14" 145V +/- 5V : 20" & 21" 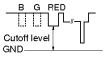
FOCUS	LL05	 Contrast = 100% Brightness = 0% Test pattern (standard values)		Sharp picture
(MAIN) **SYSTEM VOLTAGE** **+UB**	-	◑ + ☼ + ◔ = 50% Colour-Bar Test pattern W = 100% Mire de barres couleur blanc = 100% Farbbalken W = 100% Monoscopio delle barre colorate bianco = 100% Mira en color blanco = 100% AV1	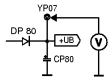	14" : 105 V +/- 1.5V 20" - 21" : 115.5 V +/- 1.5V

SERVICE-MODE (GB)

It is necessary to enter the Service Mode in order to carry out alignment of the TV set. Most adjustments can be made with the RCU, except the Focus and Screen voltages.

1. Service Mode Access

1.1 With the RCU, switch the TV set into the "**Standby**" mode.
1.2 Switch "**Off**" the TV set by mains supply switch (wait until LED is dark).
1.3 Whilst pressing the "**Magenta** (text)" button on the RCU switch "**On**" the TV set using the mains switch.
Continue to press the "**Magenta** (text)" button until the Service-setup Sub-menu appears.

```
VT01
1BIL  2BD   3B    4I    5DI   >1
FFI                       OFF
```

Important : The Service Mode cannot be entered if any equipment is connected to the Scart socket, i.e. pin 8 switching voltage present.

2. Service Menu

2.1 Navigation

- Press the ⌃ / ⌄ buttons to select the menu line.
- Press the ❮ / ❯ buttons to make adjustments or selection of a menu item.

2.2 Service Sub-Menus

• Service Set-up Sub-menu - IF Sub-menu - Video Sub-menu
Geometry Sub-menu - Hotel Menu

2.3 Activation of Service Sub-Menu

To navigate around the Service sub-menu, press the "**Magenta**" button on the RCU, to step through the sub-menus in the following order:
... No Menu ⇨ Service Set-up Sub-Menu ⇨ Service IF Sub-Menu ⇨
Service Geometry Sub-Menu ⇨ Service Video Sub-Menu ⇨
Hotel Menu ⇨ No Menu ⇨ Service Set-up Sub-Menu ...etc.

3. Alignment and storing new function value

3.1 The current value of the selected function is displayed in a hexadecimal form to the right of the function name. This value is adjusted by means of the RCU ❮ / ❯ buttons.
3.2 To "**STORE**" the functions new value whilst in any of the Service Sub-menus, press the "**OK**" button on the RCU.
3.3 To leave the Service Sub-menu press the "**Exit**" button on the RCU.

4. Temporary exit from Service Mode

4.1 To temporary leave the Service Mode, press the "**Exit**" button on the RCU. To access the everyday menus, press the "**Menu**" button on the RCU.
4.2 To return to the Service Mode,press the "**Magenta**" button on the RCU

5. Leaving the Service Mode

5.1 To leave the Service mode either, switch the TV set into "**Standby**" or switch "**Off**" the mains supply.

MODE SERVICE (F)

Le mode service sert au réglage de l'appareil. Toutes les opérations de réglage s'effectuent à l'aide de la télécommande (sauf les réglages de Focus et de tension de grille-écran).

1. Accès au mode service

1.1 Commuter le téléviseur en position de veille avec la télécommande.
1.2 Eteindre le téléviseur par l'interrupteur secteur (attendre l'extinction complète du voyant).
1.3 Maintenir la touche "**Magenta** (text)" enfoncée et mettre simultanément le téléviseur en marche avec l'interrupteur secteur. Ne pas relacher la touche "**Magenta** (text)" jusqu'à apparition du sous-menu de Service Setup.

```
VT01
1BIL  2BD   3B    4I    5DI   >1
FFI                       OFF
```

Attention : Le mode service n'est pas accessible si un appareil est connecté à la prise péritélévision.

2. Menu Service

2.1 Déplacement

- Appuyer sur la touche ⌃ / ⌄ pour sélectionner une ligne de menu.
- Appuyer sur la touche ❮ / ❯ pour un réglage ou une sélection d'une option.

2.2 Sous-Menus du mode service

• Sous- Menu Setup - Sous- Menu FI - Sous- Menu Video -
Sous- Menu Geometrie - Menu Hotel

2.3 Sélection d'un Sous-Menu

En mode service des courtes pressions sur la touche "**Magenta**" permet la sélection d'un sous- menu dans l'ordre suivant :
... Pas de Menu ⇨ Sous-menu Setup ⇨ Sous-menu FI ⇨
Sous-menu Géométrie ⇨ Sous-menu Video ⇨ Hotel Menu ⇨
Pas de Menu ⇨ Sous-menu Setup ...

3. Réglage des fonctions sélectionnées; mémorisation

3.1 La valeur momentanée de la fonction sélectionnée est indiquée sous forme hexadécimale à droite, à coté de la position à régler et peut être modifiée avec la télécommande par la touche ❮ / ❯
3.2 Dans un sous-menu (Service Setup / FI / Geometrie / Video) appuyer sur la touche "**OK**" pour mémoriser la nouvelle valeur de réglage en NVM (EEPROM).
3.3 Appuyer sur la touche "**Exit**" pour sortir d'un sous-menu.

4. Sortie temporaire du mode service

4.1 Utiliser la touche "**Exit**" de la télécommande.
Le menu utilisateur peut-être accesible via la touche "**Menu**".
4.2 Pour entrer à nouveau dans le Menu Setup utiliser la touche magenta.

5. Sortie du mode service

5.1 Pour sortir du mode service, commuter le téléviseur en position de veille ou le mettre hors service par l'interrupteur secteur.

SERVICE-MODE (D)

Der Service-Mode wird für den Geräteabgleich benötigt. Alle Einstellungen erfolgen mit der Fernbedienung (bis auf Fokuseinstellung und Schirmgitterspannung).

1.Service-Mode einschalten

1.1 Mit der Fernbedienung das Fernsehgerät in Stand-by schalten.
1.2 Das Gerät mit dem Netzschalter ausschalten (warten bis LED dunkel ist)
1.3 Während Sie die margentafarbene Taste **(text)** auf der Fernbedienung gedrückt halten, schalten Sie das Gerät mit dem Netzschalter ein. Halten Sie die margentafarbene Taste solange gedrückt bis das Service Setup Sub-Menü erscheint.

```
VT01
1BIL  2BD   3B    4I    5DI   >1
FFI                       OFF
```

Achtung : Der Service-Mode läßt sich nicht einschalten, wenn an einer Euro-AV-Buchse ein Gerät aktiviert ist, d.h. die Schaltspannung anliegt.

2. Service Menü

2.1 Navigation

-Drücken Sie die Tasten ⌃ / ⌄ zum Auswählen der Menüzeile.
-Drücken Sie die Tasten ❮ / ❯ zum Einstellen oder Auswählen in einer Menüzeile

2.2 Service Sub-Menü

• Service Setup Sub-Menü , ZF Sub-Menü , Video Sub-Menü,
Geometrie Sub-Menü - Hotel Menü

2.3 Service Sub-Menü aktivieren

Durch einen jeweils kurzen Druck auf die margentafarbene Taste wird das Service Menü in der folgenden Reihenfolge aktiviert :
... Kein Menü ⇨ Service Setup Sub-Menü ⇨ Service ZF Sub-Menü ⇨
Service Geometrie Sub-Menü ⇨ Service Video Sub-Menü ⇨
Hotel Menü ⇨ kein Menü ⇨ Service Setup Sub-Menü ...

3. Abgleich der gewählten Funktion und Speichern

3.1 Der momentane Wert der gewählten Funktion wird hexadezimal rechts neben der abzugleichenden Position angegeben und kann mit der Taste ❮ / ❯ auf der Fernbedienung verändert werden.
3.2 In den Service Sub-Menüs drücken Sie OK um die neuen Funktionswerte im NVM (EEPROM) zu speichern.
3.3 Drücken Sie "**Exit**" zum Verlassen eines Service Sub-Menüs.

4. Vorübergehendes verlassen des Service-Mode

4.1 Auf der Fernbedienung Exit drüken.
Mit der Taste Menü gelangen Sie zum Menü Übersicht.
4.2 Durch Drücken der margentafarbenen Taste gelangen Sie in das Service Setup Sub-Menü.

5. Service-Mode verlassen

5.1 Zum Verlassen des Service-Mode das Gerät in Stand By schalten oder mit dem Netzschalter ausschalten.

MODO SERVICIO (E)

Se necesita el MODO SERVICIO para ajustar el aparato. Todos los ajustes se hacen con el mando a distancia (a excepción de la tensión del sistema, los ajustes del foco y las tensiones de la rejilla de pantalla).

1. Ajustar el Modo Servicio

1.1 Con el mando a distancia conectar a STANDBY el televisor.
1.2 Desconectar el aparato con el interruptor de la red (esperar hasta que el LED se apague).
1.3 Mientras mantiene pulsado el botón "**Magenta** (texto)" de la UCR, pulse el interruptor de paso de la corriente "On" para encender el televisor. Mantenga pulsado el botón "**Magenta** (texto)" hasta que aparezca el submenú de la configuración del servicio.

```
VT01
1BIL  2BD   3B    4I    5DI   >1
FFI                       OFF
```

Atencion : No se puede conectar el MODO SERVICIO cuando en Eurotoma-AV está activado un aparato, es decir, cuando existe tensión de conexión.

2. Menú Servicio.

2.1 Desplazamiento
- Pulse el botón ⌃ / ⌄ para seleccionar la línea del menú.
- Pulse el botón ❮ / ❯ para ajustar o seleccionar una opción del menú.

2.2 Submenú Servicio
• Service Setup Sub-menu - IF Sub-menu - Video Sub-menu
Geometry Sub-menu - Hotel Menu 2.3 Activación del submenú Servicio

SERVICE-MODE (I)

Il Service-Mode è necessario per l'allineamento dell'apparecchio. Tutte le regolazioni si effettuano con il telecomando. (a parte le regolazione del fuoco e le tensioni della griglia schermo).

1. Attivazione del Service-Mode

1.1 Commutare il televisore in stand-by con il telecomando.
1.2 Spegnere l'apparecchio con l'interruttore di rete (attendere finchè il LED è spento)
1.3 Mentre tenete premuto il pulsante "**Magenta** (testo)" dell' RCU, accendete il televisore utilizzando l'interrutto di rete. Continuate a premere il pulsante "**Magenta** (testo)" dell' RCU fino all'apparizione del Service Setup Sub Menu

```
VT01
1BIL  2BD   3B    4I    5DI   >1
FFI                       OFF
```

Attenzione : Il Service-Mode non si può attivare se è attivato un apparecchio collegato alla presa di peritelevisione AV, cioè se è presente la tensione ausiliaria.

2. Service Menu

2.1 Navigazione

- Premere i tasti ⌃ / ⌄ per selezionare la linea del menu
- Premere i tasti ❮ / ❯ per la regolazione o la selezionz di un elemento del menu

2.2 Services Sub-Menu

• Service Setup Sub-menu - IF Sub-menu - Video Sub-menu
Geometry Sub-menu - Hotel Menu

2.3 Activazione del Service Sub-Menu

Nel Service Mode, una breve pressione sul tasto "**Magenta**" attiverà il Service Menu secondo questa sequenza:
... No Menu ⇨ Service Setup Sub-Menu ⇨ Service IF Sub-Menu ⇨
Service Geometry Sub-Menu ⇨ Service Video Sub-Menu ⇨
Hotel Menu ⇨ No Menu ⇨ Service Setup Sub-Menu ...

3. Taratura della funzione scelta e memorizzazione

3.1 Il valore momentaneo della funzione scelta viene indicato in formato esadecimale a destra, accanto alla posizione da allineare e può essere cambiato con il pulsante ❮ / ❯ del telecomando.
3.2 Nel Service Sub Menu (cioè Service Setup / IF /Geometry /Video Sub Menu), premere "**Ok**" per MEMORIZZARE i nuovi valori delle funzioni in NVM (EEPROM).
3.3 Premere il tasto "**Exit**" per uscire da qualsiasi Service Sub Menu.

4. Uscita temporanea dal Service Mode

4.1 Premere Exit sul telecomando.
Al menu di uso quotidiano si accede attraverso il pulsante Menu.
4.2 Il Service Setup Sub Menu è accessibile attraverso il tasto "**Magenta**".

5. Disattivazione del Service-Mode

5.1 Per disattivare il ServiceMode, commutare l'apparecchio in stand-by o spegnerlo con l'interruttore di rete.

2.3 Activación del submenú Servicio

Al pulsar brevemente el botón "**Magenta**" en el modo Servicio, activará el menú Servicio en la secuencia siguiente:
... No Menu ⇨ Service Setup Sub-Menu ⇨ Service IF Sub-Menu ⇨
Service Geometry Sub-Menu ⇨ Service Video Sub-Menu ⇨ Hotel Menu

3. Ajuste de la función elegida y almacenamiento

3.1 El valor momentáneo de la función elegida es indicado de modo hexadecimal a la derecha, al lado de la posición a ajustar, y puede cambiarse con la tecla ❮ o bien ❯ en el mando a distancia.
3.2En el submenú Servicio, es decir, Configuración del servicio/IF/Geometría/Submenú Video pulse "**OK**" para ALMACENAR el nuevo valor de las funciones en NVM (EEPROM).
3.3 Pulse el botón "**Exit**" para salir de cualquier submenú Servicio.

4. Salida temporal del Modo Servicio

4.1 Pulse Salir en el mando a distancia.
Con el botón Menu puede acceder aml menú de uso cotidiano.
4.2 Puede acceder al submenú de configuración del servicio mediante el botón "**Magenta**".

5. Salir del Modo Servicio

5.1 Conmute el aparato a STANDBY a fin de salir del MODO SERVICIO o desconectar con el interruptor de la red.

ALIGNEMENT PROCEDURE - PROCESSUS DE REGLAGES - ABGLEICH - VISUALIZZAZIONE DEL VALORE DELLA REGOLAZIONE - PROCEDIMIENTO DE ALINEACION

CHASSIS TX807 VST - VOLTAGE SYNTHESIS - SYNTHESE DE TENSION - SPANNUNGSSYNTHESE - SINTESI DI TENSIONE - SINTESIS DE TENSION

SET-UP SUB-MENU

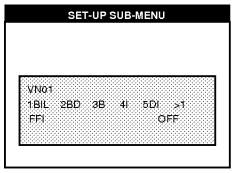

IF SUB-MENU

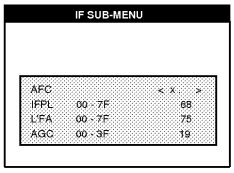

GEOMETRY SUB-MENU

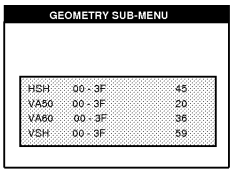

Test Bar pattern used : 4/3 with a geometric circle.
Mire utilisée : 4/3 avec un cercle de géométrie.
Benötigtes Testbild : 4/3 mit geometrischem Kreis.
Formato Testo utilizzato :4/3 con cerchio geometrico
Mira utilizada : 4/3 con circulo geometrico

VIDEO SUB-MENU

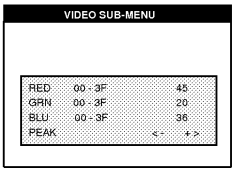

Perform the G2 and the Focus settings beforehand.
Effectuez au préalable les réglages de G2 et de focus.
Stellen Sie zuvor G2 und "Focus" ein.
Effetuare le regolazioni G2 e del Fuoco innanzitutto.
Efectuar previamente los ajustes de G2 y Foco.

HOTEL MENU

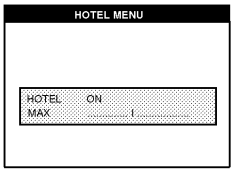

SET-UP

FT01
1st menu line :
1ère ligne du menu :
Menüzeile :
1° riga menu :
1ª linea del menú :
} **Software code**

Code	Norm	Teletext IC
VN01	BG/I/LL' BG/DKK' I,DK/I,BG	12k ROM VST - No Text. Europe market
VN02	BG/DKK'	12k ROM VST - No Text. Asia market
VT01	BG/I/LL' BG/DKK' I,DK/I,BG	16k ROM VST - ST text. Europe market
VT02	BG/DKK'	16k ROM VST - ST text. Asia market
VP01	BG/DKK' I,DK,I,BG	16k ROM VST - Philips text. Eastern Europe market
VP01	BG/DKK' I,DK,I,BG	16k ROM VST - Greek text. Europe market

1BIL 2BD 3B 4I 5DI 1
Standard

1	**BIL**	BG / I / LL'
2	**BD**	BG / DKK'
3	**B**	BG
4	**I**	I
5	**DI**	DK / I

ROM Defaut Value :
TX 807 Europe : 1BIL

FFI	- For TX807 Asia only. TX807 Europe : FFI = Off

IF

AFC
AFC Status display - Visualise l'état de AFC
AFC Status Display - Stato display AFC
Estado del CAF .

Display	AFC Status
< X . > X < . >	Fosc. too low
< . X > < . > X	Fosc. too high

IFPL	**IF PLL** adj. **VCO - 38.9MHz**
L'FA	**IF PLL** adjustment chassis (LL') **VCO 33.9MHz**

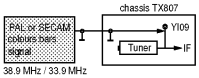

38.9 MHz / 33.9 MHz
15 mV

I - **IFPL**
Signal : PAL BG or SECAM L : 38.9 MHz / 15mV
- TV : Norm BG or L : Program Menu

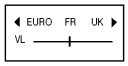

EURO : norm BG
FR : norm LL'

II - **L'FA** (For BGHILL' set)
Signal : SECAM L' : 33.9 MHz / 15mV
- TV : Norm L' : Program Menu

- Adjust IFPL (or L'FA) until the indicator (x) is within the brackets : **< x .>**.

- Régler IFPL ou L'FA pour que le curseur (x) soit dans la fenêtre AFC : **< x .>**.

- IFPL (oder L'FA) einstellen wenn der indikator (x) innerhalb der Klammern ist : **< x .>** .

- Regolare IFPL (o L'FA) in modo che l'indicatore (x) rimanga all'interno delle parentesi : **< x .>**.

- Ajustar IFPL (o L'FA) hasta que el cursor (x) esté entre los simbolos : **< x .>**.

ROM Defaut Value : IFPL : 3F - L'FA : 3F

AGC
- Minimum noise- Minimum de bruit
- Geräuschminimum - Rumore minimo
- Mínimo ruido

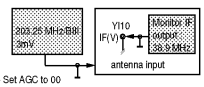

- Set AGC to 00
- Adjust AGC for maximum gain of IF signal.

ROM Defaut Value : AGC : 1F

GEOM

HSH		
VA 50		50 Hz
VA 60		60 Hz
VSH		

ROM Defaut Value :
HSH : 20
VA 50 : 18
VA 60 : 20
VSH : 1A

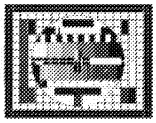

overscan V=107%

VIDEO

RED*		+ + = 50%
GRN*		Grey scale test pattern white=100%
BLU*		weiß, white

ROM Defaut Value :
RED : 1F
GRN : 1F
BLU : 1F

PEAK		PEAK WHITE ADJUSTMENT + = 50% = 100%

CRT
Pin 6,8,11

Oscillo. or colorimeter

Sets:	Nits	Vpp
14"	450	70
20"	490	-
21"	490	-

Notes :
* Adjust separate for PAL / SECAM and NTSC/AV
* Régler séparément pour PAL / SECAM et NTSC/AV
* Den Abgleich der Videowerte für PAL, SECAM, NTSC/AV getrennt durchführen.
* Regolare separatamente in PAL, SECAM, NTSC/AV.
* Realice los ajustes en PAL, SECAM, NTSC/AV por separado.

HOTEL

HOTEL	ON : Available Validation Vorhanden Opción activa Opzione attivata OFF: Not available Non validé Nicht vorhanden Opzione non attivata Opción inactiva
MAX	The hotel mode ("MAX") is used to keep the volume down and allow adjustments to the picture only. Le mode hotel (ligne "MAX") permet de limiter le volume et d'avoir accès seulement aux réglages image. Der Hotel-Modus ("MAX") wird nur verwendet, um die Lautstärke zu begrenzen und um Bildeinstellungen vorzunehmen. Il modo hotel ("MAX") consente di bloccare il volume e di accedere alla sola regolazione dell' immagine. El modo hotel ("MAX") permite mantener el volumen bajo y acceder solamente al ajuste de imagen

LOCATION OF CONTROLS - EMPLACEMENT DES REGLAGES - SERVICE LAGEPLAN - POSIZIONE REGULATORI DI SERVIZIO - SITUACIÓN DE LOS AJUSTES

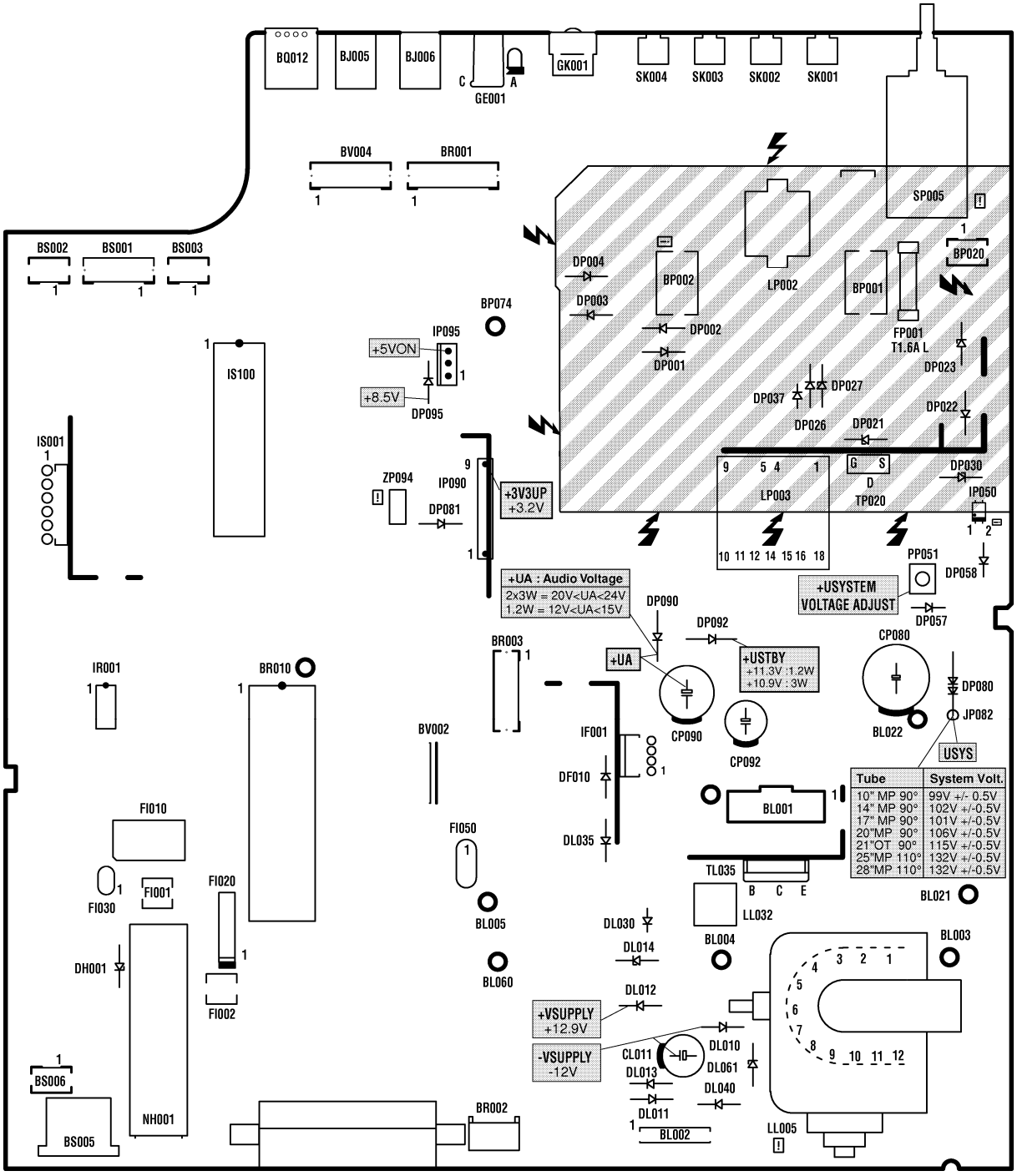

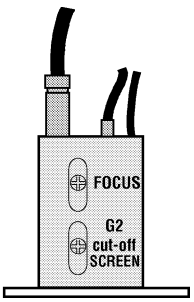

Part of board connected to mains supply.
Partie du châssis reliée au secteur.
Primärseite des Netzteils.
Parte dello châssis collegata alla rete.
Parte del chasis conectada a la red.

Use isolating mains transformer -
Utiliser un transformateur isolateur du secteur -
Trenntrafo verwenden -
Utilizar un transformador aislador de red -
Utilizzare un transformatore per isolarvi dalla rete

TX807 C/CS
First issue 03 / 00

ADJUSTMENTS - REGLAGES - EINSTELLUNGEN - REGOLAZIONE - AJUSTES

U G2 / CUTOFF	LL05	Peak white pattern ◑ + ☼ + ◕ = 50%	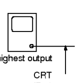 highest output CRT IB01: Pins 9 / 8 / 7	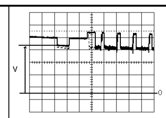 (see V Cut-off table)
FOCUS	LL05	Coontrast = 100% Brightness = 0% Test pattern (standard values)		Sharp picture
MAIN SYSTEM VOLTAGE +USYS	PP051	◑ + ☼ + ◕ = 50% TV to AV : Black tes pattern AV	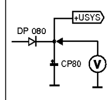	(see Usys table)

Tube	V Cut-off
10" MP 90°	125V +/- 3V
14" MP 90°	125V +/- 3V
17" MP 90°	140V +/- 3V
20" MP 90°	140V +/- 3V
21" MP 90°	140V +/- 3V
21" OT 90°	140V +/- 3V
25" MP110°	140V +/- 3V

Tube	Usys	RL090	JL981-982	JL991-992
10" MP 90°	99V +/- 0.5V	78k8	JL981	JL992
14" MP 90°	102V +/-0.5V	76k8	JL982	JL992
17" MP 90°	101V +/-0.5V	76k8	JL982	JL991
20"MP 90°	106V +/-0.5V	86k6	JL981	JL992
21"OT 90°	115V +/-0.5V	95k3	JL982	JL992
25"MP 110°	132V +/-0.5V	-	JL981	JL992
28"MP 110°	132V +/-0.5V	-	JL981	JL992

SERVICE-MODE (GB)

It is necessary to enter the Service Mode in order to carry out alignment of the TV set. Most adjustments can be made with the RCU, except the Focus and Screen voltages.

1. Service Mode Access

1.1 With the RCU, switch the TV set into the "**Standby**" mode.
1.2 Switch "**Off**" the TV set by mains supply switch (wait until LED is dark).
1.3 Whilst pressing the "**Magenta** (text)" button on the RCU switch "**On**" the TV set using the mains switch.
Continue to press the "**Magenta** (text)" button until the Service-setup Sub-menu appears.

```
ID 00.07                 (1)

INIT        ◁ ▷          (2)
STANDARD    00  0-03     (3)
```

2. Service Menu

2.1 Navigation

- Press the ▲/▼ buttons to select the menu line.
- Press the ◄/► buttons to make adjustments or selection of a menu item.

2.2 Service-Menu lines

Set-up lines (INIT,STANDARD,OSDCONTR) -
Geometry lines (HS,VS, VA, SC,VSH)
Video lines (CL, BLORS/BLORP,BLOGS/BLOGP,WPRS/WPRP,WPGS/WPGP, WPBS/WPBP, PWS/PWP, BKS, YD) -
IF lines (TOP) -
Video processor (CD0, CD1, SYN0, SYN1, DEF,VI0,VI1,SOUND,CONT0, CONT1,FEAT0).

2.3 Activation of a line :

The first line (1) is continuously displayed. Sequential selection of the others lines in the Service Menu is possible by pressing the ▲/▼ buttons on the RCU. The selected line will be highlighted in YELLOW text.

3. Alignment and storing new function value

3.1 The current value of the selected function is displayed in a hexadecimal form to the right of the function name. This value is adjusted by means of the RCU ◄/► buttons.
3.2 The values will be stored in the non-volatile memory when leaving the service menu.
3.3 To leave the Service menu press the "**Exit**" button on the RCU.

4. Temporary exit from Service Mode

4.1 To temporary leave the Service Mode, press the "**Exit**" button on the RCU. To access the everyday menus, press the "**Menu**" button on the RCU.
4.2 To return to the Service Menu, press the "**Magenta**" button on the RCU

5. Leaving the Service Mode

5.1 To **EXIT** the Service Menu either press, the "**Standby**" button on the RCU or switch "**Off**" the mains supply to the TV.

MODE SERVICE (F)

Le mode service sert au réglage de l'appareil. Toutes les opérations de réglage s'effectuent à l'aide de la télécommande (sauf les réglages de Focus et de tension de grille-écran).

1. Accès au mode service

1.1 Commuter le téléviseur en position de veille avec la télécommande.
1.2 Eteindre le téléviseur par l'interrupteur secteur (attendre l'extinction complète du voyant).
1.3 Maintenir la touche "**Magenta** (text)" enfoncée et mettre simultanément le téléviseur en marche avec l'interrupteur secteur. Ne pas relacher la touche "**Magenta** (text)" jusqu'à apparition du menu

```
ID 00.07                 (1)

INIT                     (2)
STANDARD    00  0-03     (3)
```

2. Menu Service

2.1 Déplacement

- Appuyer sur la touche ▲/▼ pour sélectionner une ligne de menu.
- Appuyer sur la touche ◄/► pour un réglage ou une sélection d'une option.

2.2 Lignes de Menus du mode service

Set-up lines (INIT,STANDARD,OSDCONTR) -
Geometry lines (HS,VS, VA, SC,VSH)
Video lines (CL, BLORS/BLORP,BLOGS/BLOGP,WPRS/WPRP,WPGS/WPGP, WPBS/WPBP, PWS/PWP, BKS, YD) - **IF lines** (TOP) -
Videoprocessor (CD0, CD1, SYN0, SYN1, DEF,VI0,VI1,SOUND,CONT0, CONT1,FEAT0).

2.3 Sélection d'une ligne:

La premières ligne (1) du menu est toujours affichée.
De courtes pressions sur la touche "▲/▼" sélectionnent séquentiellement les lignes (2) ou (3) du menu de service.
La ligne activée est de couleur jaune.

3. Réglage des fonctions sélectionnées; mémorisation

3.1 La valeur momentanée de la fonction sélectionnée est indiquée sous forme hexadécimale à droite, à coté de la position à régler et peut être modifiée avec la télécommande par la touche ◄/► .
3.2 La valeur de réglage est mémorisée dans la mémoire non volatile en sortie de mode service.
3.3 Appuyer sur la touche "**Exit**" pour sortir d'un sous-menu.

4. Sortie temporaire du mode service

4.1 Utiliser la touche "**Exit**" de la télécommande.
Le menu utilisateur peut-être accesible via la touche "**Menu**".
4.2 Pour entrer à nouveau dans le Menu Setup utiliser la touche magenta.

5. Sortie du mode service

5.1 Pour sortir du mode service, commuter le téléviseur en position de veille ou le mettre hors service par l'interrupteur secteur.

SERVICE-MODE (D)

Der Service-Mode wird für den Geräteabgleich benötigt. Alle Einstellungen erfolgen mit der Fernbedienung (bis auf Fokuseinstellung und Schirmgitterspannung).

1.Service-Mode einschalten

1.1 Mit der Fernbedienung das Fernsehgerät in Stand-by schalten.
1.2 Das Gerät mit dem Netzschalter ausschalten (warten bis LED dunkel ist)
1.3 Während Sie die margentafarbene Taste **(text)** auf der Fernbedienung gedrückt halten, schalten Sie das Gerät mit dem Netzschalter ein. Halten Sie die margentafarbene Taste solange gedrückt bis das Service Setup Sub-Menü erscheint.

```
ID 00.07                 (1)

INIT                     (2)
STANDARD    00  0-03     (3)
```

2. Service Menü

2.1 Navigation

-Drücken Sie die Tasten ▲/▼ zum Auswählen der Menüzeile.
-Drücken Sie die ◄/► -Tasten um eine Menüfunktion anzuwählen oder abzugleichen.

2.2 Service-Menü Zeilen

Set-up lines (INIT,STANDARD,OSDCONTR) -
Geometry lines (HS,VS, VA, SC,VSH)
Video lines (CL, BLORS/BLORP,BLOGS/BLOGP,WPRS/WPRP,WPGS/WPGP, WPBS/WPBP, PWS/PWP, BKS, YD) - **IF lines** (TOP) -
Videoprocessor (CD0, CD1, SYN0, SYN1, DEF,VI0,VI1,SOUND,CONT0, CONT1,FEAT0).

2.3 Aktivierung einer Menüzeile:

Die erste Zeile (1) wird ständig angezeigt. Die Anwahl der Zeilen (2) und (3) im Service-Menü ist durch Drücken der ▲/▼- Tasten möglich.
Die gewählte Zeile wird in gelber Farbe dargestellt.

3. Abgleich der gewählten Funktion und Speichern

3.1 Der momentane Wert der gewählten Funktion wird hexadezimal rechts neben der abzugleichenden Position angegeben und kann mit der Taste ◄/► auf der Fernbedienung verändert werden.
3.2 Die Werte werden nach dem Verlassen des Service-Menüs im nichtflüchtigen Speicher (EEPROM) abgelegt.
3.3 Drücken Sie "**Exit**" zum Verlassen eines Service Sub-Menüs.

4. Vorübergehendes verlassen des Service-Mode

4.1 Auf der Fernbedienung Exit drücken.
Mit der Tasten Menü gelangen Sie zum Menü-Übersicht.
4.2 Durch Drücken der margentafarbenen Taste gelangen Sie in das Service Setup Sub-Menü.

5. Service-Mode verlassen

5.1 Zum Verlassen des Service-Mode das Gerät in Stand By schalten oder mit dem Netzschalter ausschalten.

SERVICE-MODE (I)

Il Service-Mode è necessario per l'allineamento dell'apparecchio. Tutte le regolazioni si effettuano con il telecomando. (tranne le regolazionu del fuoco e le tensioni della griglia schermo).

1. Attivazione del Service-Mode

1.1 Commutare il televisore in stand-by con il telecomando.
1.2 Spegnere l'apparecchio con l'interruttore di rete (attendere finchè il LED è spento)
1.3 Mentre tenete premuto il pulsante "**Magenta** (testo)" del RCU, accendete il televisore utilizzando l'interruttore di rete. Continuate a premere il pulsante "**Magenta** (testo)" del RCU fino all'apparizione del Service Setup Sub Menu

```
ID 00.07                 (1)

INIT                     (2)
STANDARD    00  0-03     (3)
```

2. Service Menu

2.1 Navigazione

- Premere i tasti ▲/▼ per selezionare la linea del menu
- Premere i tasti ◄/► per la regolazione o la selezionz di un elemento del menu

2.2 Linee Service Menu

Set-up lines (INIT,STANDARD,OSDCONTR) -
Geometry lines (HS,VS, VA, SC,VSH)
Video lines (CL, BLORS/BLORP,BLOGS/BLOGP,WPRS/WPRP,WPGS/WPGP, WPBS/WPBP, PWS/PWP, BKS, YD) - **IF lines** (TOP) -
Videoprocessor (CD0, CD1, SYN0, SYN1, DEF,VI0,VI1,SOUND,CONT0, CONT1,FEAT0).

2.3 Attivazione di una linea :

La prima linea (1) è continuamente visualizzata. La selezione delle linee sucessive (2) o (3) è possibile in service menu premendo i tasi ▲/▼.
la linea selezionata sarà visualizzata di colore giallo.

3. Taratura della funzione scelta e memorizzazione

3.1 Il valore momentaneo della funzione scelta viene indicato in formato esadecimale a destra, accanto alla posizione da allineare e può essere cambiato con il pulsante ◄/► del telecomando.
3.2 I valori verranno memorizzati nella memoria num quando verrà lasciato il menù service mode.
3.3 Premere il tasto "**Exit**" per uscire da qualsiasi Service Sub Menu.

4. Uscita temporanea dal Service Mode

4.1 Premere Exit sul telecomando.
Al menu di uso quotidiano si accede attraverso il pulsante Menu.
4.2 Il Service Setup Sub Menu è accessibile attraverso il tasto "**Magenta**".

5. Disattivazione del Service-Mode

5.1 Per disattivare il Service Mode, commutare l'apparecchio in stand-by o spegnerlo con l'interruttore di rete.

MODO SERVICIO (E)

Se necesita el MODO SERVICIO para ajustar el aparato. Todos los ajustes se hacen con el mando a distancia (a excepción de la tensión del sistema, los ajustes del foco y las tensiones de la rejilla de pantalla).

1. Ajustar el Modo Servicio

1.1 Con el mando a distancia conectar a STANDBY el televisor.
1.2 Desconectar el aparato con el interruptor de la red (esperar hasta que el LED se apague).
1.3 Mientras mantiene pulsado el botón "**Magenta** (texto)" de la UCR, pulse el interruptor general de red para encender el televisor.
Mantenga pulsado el botón "**Magenta** (texto)" hasta que aparezca el submenú de la configuración del servicio.

```
ID 00.07                 (1)

INIT                     (2)
STANDARD    00  0-03     (3)
```

2. Menú Servicio.

2.1 Desplazamiento
- Pulse el botón ▲/▼ para seleccionar la línea del menú.
- Pulse el botón ◄/► para ajustar o seleccionar una opción del menú.

2.2 Líneas del menú del Modo Servicio
Set-up lines (INIT,STANDARD,OSDCONTR) -
Geometry lines (HS,VS, VA, SC,VSH)
Video lines (CL, BLORS/BLORP,BLOGS/BLOGP,WPRS/WPRP,WPGS/WPGP, WPBS/WPBP, PWS/PWP, BKS, YD) - **IF lines** (TOP) -
Videoprocessor (CD0, CD1, SYN0, SYN1, DEF,VI0,VI1,SOUND,CONT0, CONT1,FEAT0).

2.3 Activación de una línea :
La primera línea (1) se muestra siempre en la pantalla. La selección secuencial de las líneas (2) y (3), es posible pulsando las teclas ▲ / ▼.
La línea seleccionada es la que está en color amarillo

3. Ajuste de la función elegida y almacenamiento

3.1 El valor momentáneo de la función elegida es indicado de modo hexadecimal a la derecha, al lado de la posición a ajustar, y puede cambiarse con la tecla ◄ o bien ► en el mando a distancia.
3.2 Los valores serán memorizados en la EEPROM al salir del menú del Modo Servicio.
3.3 Pulse el botón "**Exit**" para salir de cualquier submenú Servicio.

4. Salida temporal del Modo Servicio

4.1 Pulse Salir en el mando a distancia.
Con el botón Menu puede acceder al menú de uso cotidiano.
4.2 Puede acceder al submenú de configuración del servicio mediante el botón "**Magenta**".

5. Salir del Modo Servicio

5.1 Conmute el aparato a STANDBY a fin de salir del MODO SERVICIO o desconectar con el interruptor de la red.

ALIGNMENT PROCEDURE - PROCESSUS DE REGLAGES - ABGLEICH - VISUALIZZAZIONE DEL VALORE DI REGOLAZIONE - PROCEDIMIENTO DE ALINEACION

SET-UP LINES

ID	00 07
INIT	◀ ▶
STANDARD	00 0-03
OSDCONTR	07 0-0F
FR	00

ID 00.07	Software code

INIT
Initialise TV set.
Sets all Service Mode functions stored in the EEprom to their default values.
See below the default values table.

⚠ "INIT" copy all service parameters from the ROM to EEprom. It will be necessary in this case to readjust most of the service mode functions.

⚠ "INIT" copie toutes les valeurs par défaut stockées en ROM vers l'EEprom.Il peut être nécessaire dans ce cas de reprendre la plupart des réglages du mode service.

⚠ "INIT" kopiert alle Service-Parameter aus dem ROM in das EEPROM. Es ist anschliessend notwendig die meisten Service-Funktionen neu abzugleichen.

⚠ "INIT" copia tutti i parametri di servizio dalla ROM alla EEprom. Sarà necessario in seguito regolare alcune funzioni in Service Mode.

⚠ "INIT" copia todos los valores por defecto memorizados en la ROM hacia la EEPROM. Puede ser necesario en el caso de tener que reajustar la mayor parte de los ajustes en Modo Servicio.

STANDARD
RF Norm Group Selection

00	EU	BG / LL'
01	FR	LL' / BG
02	UK	PAL I only
03	DK	DKK' PAL, SECAM

ROM Default Value :
TX 807 C / CS Europe : 00 EU

OSDCONTR **Full-page video text contrast**	factory Setting OSDCONTR = 03H

FR Factory Setting: FR=00H
Specific TX807C mono TDA9351N1.

00: FR is not available in progr. menus.
00 :FR non disponible dans le menu de programmation
00: FR ist im Prog. Menü nicht verfügbar
00: FR non è disponibile nel menu prog.
00 : FR no está disponible en el menú programación

V-Slope

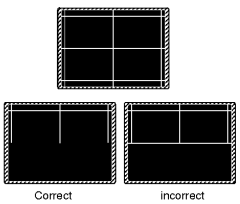

Correct incorrect

GEOMETRY LINES*

HS	20 0-3F
VS	**◀ 1A 0-3F ▶**
VA	20 0-3F
SC	10 0-3F
VSH	20 0-3F

HS	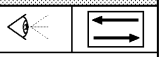	

VS
V_Slope

- Apply a test pattern signal to the TV with a single horizontal and vertical line on the screen.
- Select the "**VS**" line of the menu. The bottom half of the screen will go black.
- Adjust VS until the centre line of the pattern is just invisible.
- Leave the line "**V_Slope**".
- Switch the test pattern signal to the crosshatch geometry pattern.
- Perform the geometry adjustments described below.

- Appliquer une mire de barres avec seulement une ligne blanche horizontale en milieu de l'écran.
- Sélectionner la ligne "**V-Slope**". La moitié basse de l'écran devient noire.
- Aligner "**V_Slope**" pour que la ligne médiane soit à peine non visible.
- Commuter la mire en mode de réglage de géométrie (quadrillage).
- Effectuer les reglages de geometrie ci- après.

- Speisen Sie ein Testbild mit einem horizontalen Strich in der Bildmitte ein.
- Wählen Sie im Menü die Funktion "V-Slope" an. Die untere Bildhälfte wird dunkel.
- Stellen Sie "V-Slope" so ein, daß die Mittellinie fast verschwindet.
- Verlassen Sie die Funktion "V-Slope".
- Speisen Sie ein Gittertestbild ein.
- Nehmen Sie die Geometrieeinstellungen wie nebenstehend beschrieben vor.

- Applicare un monoscopio con un'unica linea bianca orizzontale al centro dello schermo
- Selezionare la riga "**V slope**" del menu. La parte bassa dello schermo viene oscurata.
- Allineare la "Vertical Slope" in modo che la linea centrale sia appena visibile
- Abbandonare la riga "**V slope**".
- Posizionare il monoscopio
- Effettuare le regolazioni di geometria descritte in precedenza
- Memorizzare.

- Aplique una carta de ajuste con sólo una linea blanca horizontal y una vertical en el centro de la pantalla.
- Seleccionar en el menú, la linea "**V-Slope**". La mitad inferior de la pantalla se pondrá oscura.
- Ajuste "**V-Slope**" justo hasta que la linea horizontal sea invisible.
- Cambiar la carta de ajuste a "cuadricula" y efectuar los ajustes de geometria descritos a continuación.
- Antes de salir, memorizar con "Store"

VA	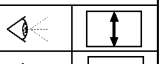	
SC **S-Correction**		S
VSH	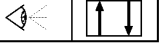	

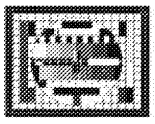

overscan :
V=107%
H=107%

VIDEO LINES

CL	**◀ 00 0-0F ▶**
BLORS*	08 0-0F
BLOGS*	08 0-0F
WPRS*	20 0-3F
WPGS*	20 0-3F
PWS*	20 20 20 0-3F
BKS*	ON OFF-ON
YD	08 0-0F

CL **Cathode Level**	Factory setting. Extension of the peak White range. Réglage usine. Extension des valeurs de réglages du Peak White. Factory Setting. Extension of the peak White range. Factory Setting. Extension of the peak White range. Ajuste de fábrica Extensión del margen del Peak White.	
Cutt-off ** **BLORS / BLORP** **Black level offset Red SECAM/PAL** **BLOGS / BLOGP** **Black level offset Green SECAM/PAL**		☼ + ◔ + ◑ = 50% Grey scale test pattern white =100% grey
Drive** **WPRS / WPRP** **White point Red SECAM/PAL** **WPGS / WPGP** **White point Green SECAM/PAL** **WPBS / WPBP** **White point Blue SECAM/PAL**	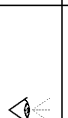	☼ + ◔ + ◑ = 50% Grey scale test pattern white =100% white
PWS / PWP** **Peak White SECAM/PAL**	 CRT Pin 6,8,11 Oscillo. or colounmeter	☼ + ◔ + ◑ = 50% Sets / Nits / Vpp 14" 450 70 20" 490 - 21" 490 -
BKS **Black Stretch**	factory Setting	
YD **Luminance Delay**		Use ◀▶ to adapt the image

*Perform the G2 and the Focus settings beforehand.
Effectuez au préalable les réglages de G2 et de focus.
Stellen Sie zuvor G2 und "Focus" ein.
Effetuare le regolazioni G2 e del Fuoco innanzitutto.
Efectuar previamente los ajustes de G2 y Foco

** Adjust separate for PAL / SECAM
" S " : Video signal received is SECAM.
" P " : Video signal received is PAL.

IF LINES

TOP	**◀ 20 0-0F ▶**

TOP
AGC - Take Over

- Minimum noise- Minimum de bruit
- Minimum Rauschen - Rumore minimo
- Mínimo ruido

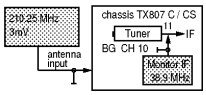

- Set TOP to 00
- Adjust TOP for maximum gain of IF signal.
- Reduce IF level about 8dB.

ROM Defaut Value : AGC : 20

VIDEO PROCESSOR LINES

CD0	84 0-FF
CD1	00 0-0F
SYN0	**◀ 30 0-FF ▶**
SYN1	08 0-FF
DEF	00 0-0F
VI0	40 0-FF
VI1	00 0-0F
SOUND	00 0-FF
CONT0	46 0-FF
CONT1	00 0-0F
FEAT0	00 0-01

CD0 **CD1**	- Colour Decoder 0 = 84 - Colour Decoder 1 **mono sets: CD1 = 80H** **stereo sets: CD1 = 00H** Factory setting.
SYN0 **SYN1**	- Syncronisation 0 = 30 - Syncronisation 1 = 1C Factory setting.
DEF	- Deflection = 00 Factory setting.
VI0 **VI1**	- Vision IF 0 = 40 - Vision IF 1 = 00 Factory setting.
SOUND	- Sound = 00 Factory setting.
CONT0 **CONT0**	- Control 0 = 40 - Control 1 = 00 Factory setting.
FEAT0	- Features 0 = 00 Factory setting.

DEFAULT VALUES

OSD	DESCRIPTION	DEFAULT VALUE (HEX)
ID	**Software**	
INIT	**Initialise TV set**	
STANDARD	**RF Norm Group Selection**	**0 (EU)**
OSDCONTR	**OSD Contrast**	**03**
FR	**France**	**00**
HS	**Horizontal shift**	**20**
VS	**Vertical Slope**	**1A**
VA	**Vertical Amplitude**	**20**
SC	**S-Correction**	**10**
VSH	**Vertical shift**	**20**
CL	**Cathode Level**	**00**
BLORS	**Black level offset Red SECAM**	**8**
BLORP	**Black level offset Red PAL**	**8**
BLOGS	**Black level offset Green SECAM**	**8**
BLOGP	**Black level offset Green SECAM**	**8**
WPRS	**White point Red SECAM**	**20**
WPRP	**White point Red PAL**	**20**
WPGS	**White point Green SECAM**	**20**
WPGP	**White point Green PAL**	**20**
WPBS	**White point Blue SECAM**	**20**
WPBP	**White point Blue PAL**	**20**
PWS	**Peak White SECAM**	**20**
PWP	**Peak White PAL**	**20**
BKS	**Black Stretch**	**01**
YD	**Luminance Delay**	**08**
TOP	**AGC take-over**	**20**
CD0	**Colour Decoder 0**	**84**
CD1	**Colour Decoder 1**	**Mono : 80** **Stereo: 00**
SYN0	**Synchronisation 0**	**30**
SYN1	**Synchronisation 1**	**1C**
DEF	**Deflection**	**00**
VI0	**Vision IF 0**	**40**
VI1	**Vision IF 1**	**00**
SOUND	**Sound**	**00**
CONT0	**Control 0**	**40**
CONT1	**Control 1**	**00**
FEAT0	**Features 0**	**00**

LOCATION OF CONTROLS - EMPLACEMENT DES REGLAGES - LAGEPLAN EINSTELLER - POSIZIONE REGULATORI DI SERVIZIO - SITUACIÓN DE LOS AJUSTES

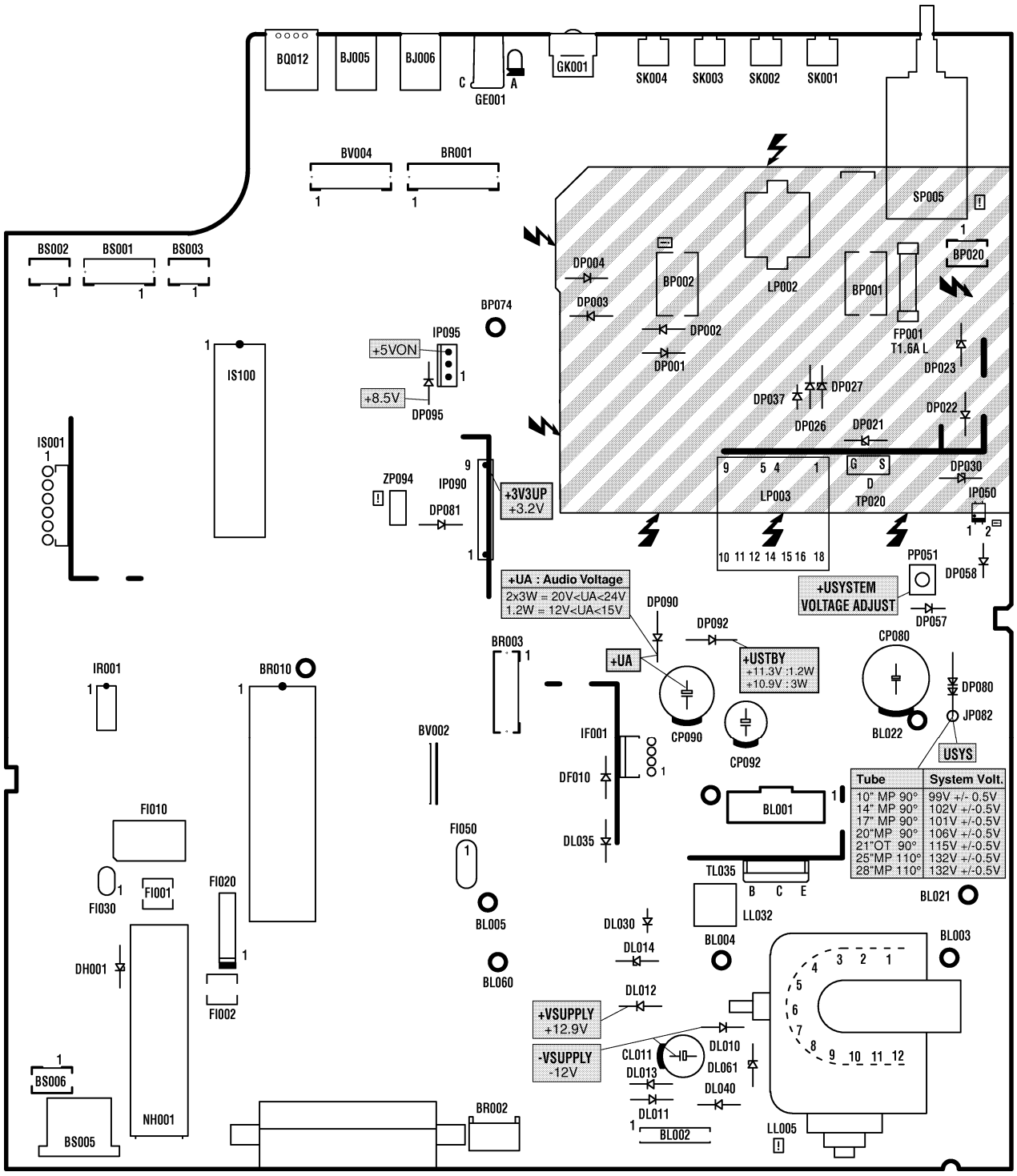

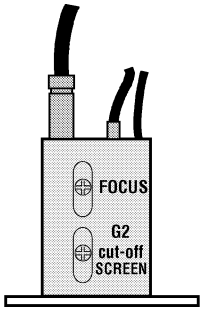

Part of board connected to mains supply.
Partie du châssis reliée au secteur.
Primärseite des Netzteils.
Parte dello châssis collegata alla rete.
Parte del chasis conectada a la red

Use isolating mains transformer -
Utiliser un transformateur isolateur du secteur -
Trenntrafo verwenden -
Utilizar un transformador aislador de red -
Utilizzare un transformatore per isolarvi dalla rete

ADJUSTMENTS - REGLAGES - EINSTELLUNGEN - REGOLAZIONE - AJUSTES

U G2 / CUTOFF	LL05	Peak white pattern + + = 50%	highest output CRT IB01: Pins 9 / 8 / 7	V 0 140V: with IV001: TDA9554PS
FOCUS	LL05	Contrast = 100% Brightness = 0% Test pattern (standard values)		Sharp picture
MAIN **SYSTEM VOLTAGE** **+USYS**	PP051	+ + = 50% TV to AV : Black tes pattern AV	DP 080 +USYS CP80 V	

Tube	V Cutt-off
10" MP 90°	125V +/- 3V
14" MP 90°	125V +/- 3V
17" MP 90°	125V* +/- 3V
20" MP 90°	125V* +/- 3V
21" MP 90°	125V* +/- 3V
21" OT 90°	125V* +/- 3V
25" MP110°	125V* +/- 3V

Tube	Usys	RL090	JL981-982	JL991-992
10" MP 90°	98V +/- 0.5V	76k8	JL981	JL992
14" MP 90°	101V +/-0.5V	76k8	JL982	JL992
17" MP 90°	101V +/-0.5V	76k8	JL982	JL991
20"MP 90°	106V +/-0.5V	86k6	JL981	JL992
21"OT 90°	114V +/-0.5V	95k3	JL982	JL992
25"MP 110°	132V +/-0.5V	127k	JL982	JL992
28"MP 110°	132V +/-0.5V	127k	JL982	JL992

EAST-WEST MODULE - MODULE EST-OUEST - OST-WEST-MODUL - MODULO EST-OVEST - MODULO ESTE-OESTE

GEOMETRY	TV : AV1 Test pattern Standard TV - Settings : + + = 50%		Correct picture
EWM	PL140 PL141 PL143 SERVICE MODE	GB	- Please refer to geometry Mode alignment (110° tube) , page 7, to adjust the East West Module (EWM).
		F	- Se référer à la méthode d'alignement des géometries (tubes 110°), page 7 pour effectuer les réglages du Module Est-Ouest (EWM).
		D	- Abgleich des Ost-West-Modules: Siehe Geometrie-Abgleich (110°), Seite 7.
		I	- Per le regolazioni del Modulo Est-Ovest fare riferimnto al modo allineamento geometria (tubi 110°), pagina 7.
		E	- Para los ajustes del módulo Este-Oeste (EWM) ver la página 7, modo ajuste geometría (tubo 110º)
			PL140 PL141 PL143

LOCATION OF CONTROLS - EMPLACEMENT DES REGLAGES - LAGEPLAN EINSTELLER - POSIZIONE REGULATORI DI SERVIZIO - SITUACIÓN DE LOS AJUSTES

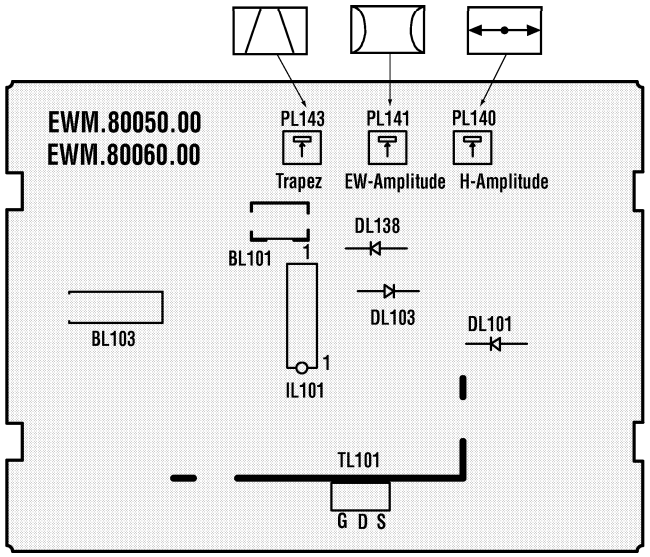

SERVICE-MODE GB

It is necessary to enter the Service Mode in order to carry out alignment of the TV set. Most adjustments can be made with the RCU, except the Focus and Screen voltages.

1. Service Mode Access

1.1 With the RCU, switch the TV set into the "**Standby**" mode.
1.2 Switch "**Off**" the TV set by mains supply switch (wait until LED is dark).
1.3 Whilst pressing the ‘’**Magenta** (text)’’ button on the RCU switch "**On**" the TV set using the mains switch.
Continue to press the "**Magenta** (text)" button until the Service-setup Sub-menu appears.

ID 00.07	*(1)*
INIT ◅ ▻	*(2)*
STANDARD 00 0-03	*(3)*

2. Service Menu

2.1 Navigation

- Press the ⩓ / ⩔ buttons to select the menu line.
- Press the ⟨ / ⟩ buttons to make adjustments or selection of a menu item.

2.2 Service-Menu lines

Set-up lines (INIT,STANDARD,OSDCONTR) -
Geometry lines (HS,VS, VA, SC,VSH)
Video lines (CL, BLORS/BLORP,BLOGS/BLOGP,WPRS/WPRP,WPGS/WPGP, WPBS/WPBP, PWS/PWP, BKS, YD) -
IF lines (TOP) -
Video processor (CD0, CD1, SYN0, SYN1, DEF,VI0,VI1,SOUND,CONT0, CONT1,FEAT0).

2.3 Activation of a line :

The first line (1) is continuously displayed. Sequential selection of the others lines in the Service Menu is possible by pressing the ⩓ / ⩔ buttons on the RCU. The selected line will be highlighted in YELLOW text.

3. Alignment and storing new function value

3.1 The current value of the selected function is displayed in a hexadecimal form to the right of the function name. This value is adjusted by means of the RCU ⟨ / ⟩ buttons.
3.2 The values will be stored in the non-volatile memory when leaving the service menu.
3.3 To leave the Service menu press the ‘’**Exit**’’ button on the RCU.

4. Temporary exit from Service Mode

4.1 To temporary leave the Service Mode, press the ‘’**Exit**’’ button on the RCU. To access the everyday menus, press the ‘’**Menu**’’ button on the RCU.
4.2 To return to the Service Menu, press the ‘’**Magenta**’’ button on the RCU

5. Leaving the Service Mode

5.1 To **EXIT** the Service Menu either press, the "**Standby**" button on the RCU or switch "**Off**" the mains supply to the TV.

MODE SERVICE F

Le mode service sert au réglage de l’appareil. Toutes les opérations de réglage s’effectuent à l’aide de la télécommande (sauf les réglages de Focus et de tension de grille-écran).

1. Accès au mode service

1.1 Commuter le téléviseur en position de veille avec la télécommande.
1.2 Eteindre le téléviseur par l’interrupteur secteur (attendre l’extinction complète du voyant).
1.3 Maintenir la touche "**Magenta** (text)" enfoncée et mettre simultanément le téléviseur en marche avec l’interrupteur secteur.
Ne pas relacher la touche "**Magenta** (text)" jusqu’à apparition du menu

ID 00.07	*(1)*
INIT	*(2)*
STANDARD 00 0-03	*(3)*

2. Menu Service

2.1 Déplacement

- Appuyer sur la touche ⩓ / ⩔ pour sélectionner une ligne de menu.
- Appuyer sur la touche ⟨ / ⟩ pour un réglage ou une sélection d’une option.

2.2 Lignes de Menus du mode service

Set-up lines (INIT,STANDARD,OSDCONTR) -
Geometry lines (HS,VS, VA, SC,VSH)
Video lines (CL, BLORS/BLORP,BLOGS/BLOGP,WPRS/WPRP,WPGS/WPGP, WPBS/WPBP, PWS/PWP, BKS, YD) - **IF lines** (TOP) -
Videoprocessor (CD0, CD1, SYN0, SYN1, DEF,VI0,VI1,SOUND,CONT0, CONT1,FEAT0).

2.3 Sélection d’une ligne:

La premières ligne (1) du menu est toujours affichée.
De courtes pressions sur la touche "⩓ / ⩔" sélectionnent séquentiellement les lignes (2) ou (3) du menu de service.
La ligne activée est de couleur jaune.

3. Réglage des fonctions sélectionnées; mémorisation

3.1 La valeur momentanée de la fonction sélectionnée est indiquée sous forme hexadécimale à droite, à coté de la position à régler et peut être modifiée avec la télécommande par la touche ⟨ / ⟩ .
3.2 La valeur de réglage est mémorisée dans la mémoire non volatile en sortie de mode service.
3.3 Appuyer sur la touche "**Exit**" pour sortir d’un sous-menu.

4. Sortie temporaire du mode service

4.1 Utiliser la touche "**Exit**" de la télécommande.
Le menu utilisateur peut-être accesible via la touche "**Menu**".
4.2 Pour entrer à nouveau dans le Menu Setup utiliser la touche magenta.

5. Sortie du mode service

5.1 Pour sortir du mode service, commuter le téléviseur en position de veille ou le mettre hors service par l’interrupteur secteur.

SERVICE-MODE (D)

Der Service-Mode wird für den Geräteabgleich benötigt. Alle Einstellungen erfolgen mit der Fernbedienung (bis auf Fokuseinstellung und Schirmgitterspannung).

1.Service-Mode einschalten

1.1 Mit der Fernbedienung das Fernsehgerät in Stand-by schalten.
1.2 Das Gerät mit dem Netzschalter ausschalten (warten bis LED dunkel ist)
1.3 Während Sie die margentafarbene Taste **(text)** auf der Fernbedienung gedrückt halten, schalten Sie das Gerät mit dem Netzschalter ein. Halten Sie die margentafarbene Taste solange gedrückt bis das Service Setup Sub-Menü erscheint.

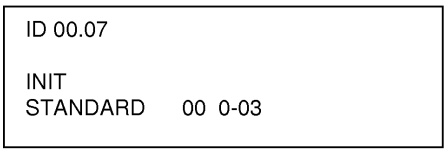

2. Service Menü

2.1 Navigation

-Drücken Sie die Tasten ⩓ / ⩔ zum Auswählen der Menüzeile.
-Drücken Sie die ⟨ / ⟩ -Tasten um eine Menüfunktion anzuwählen oder abzugleichen.

2.2 Service-Menü Zeilen

Set-up lines (INIT,STANDARD,OSDCONTR) -
Geometry lines (HS,VS, VA, SC,VSH)
Video lines (CL, BLORS/BLORP,BLOGS/BLOGP,WPRS/WPRP,WPGS/WPGP, WPBS/WPBP, PWS/PWP, BKS, YD) - **IF lines** (TOP) -
Videoprocessor (CD0, CD1, SYN0, SYN1, DEF,VI0,VI1,SOUND,CONT0, CONT1,FEAT0).

2.3 Aktivierung einer Menüzeile:

Die erste Zeile (1) wird ständig angezeigt. Die Anwahl der Zeilen (2) und (3) im Service-Menü ist durch Drücken der ⩓ / ⩔ - Tasten möglich.
Die gewählte Zeile wird in gelber Farbe dargestellt.

3. Abgleich der gewählten Funktion und Speichern

3.1 Der momentane Wert der gewählten Funktion wird hexadezimal rechts neben der abzugleichenden Position angegeben und kann mit der Taste ⟨ / ⟩ auf der Fembedienung verändert werden.
3.2 Die Werte werden nach dem Verlassen des Service-Menüs im nichtflüchtigen Speicher (EEPROM) abgelegt.
3.3 Drücken Sie "**Exit**" zum Verlassen eines Service Sub-Menüs.

4. Vorübergehendes verlassen des Service-Mode

4.1 Auf der Fernbedienung Exit drücken.
Mit der Tasten Menü gelangen Sie zum Menü-Übersicht.
4.2 Durch Drücken der margentafarbenen Taste gelangen Sie in das Service Setup Sub-Menü.

5. Service-Mode verlassen

5.1 Zum Verlassen des Service-Mode das Gerät in Stand By schalten oder mit dem Netzschalter ausschalten.

SERVICE-MODE (I)

Il Service-Mode è necessario per l'allineamento dell'apparecchio. Tutte le regolazioni si effettuano con il telecomando. (tranne le regolazionu del fuoco e le tensioni della griglia schermo).

1. Attivazione del Service-Mode

1.1 Commutare il televisore in stand-by con il telecomando.
1.2 Spegnere l'apparecchio con l'interruttore di rete (attendere finchè il LED è spento)
1.3 Mentre tenete premuto il pulsante "**Magenta** (testo)" del RCU, accendete il televisore utilizzando l'interruttore di rete. Continuate a premere il pulsante "**Magenta** (testo)" del RCU fino all'apparizione del Service Setup Sub Menu

2. Service Menu

2.1 Navigazione

- Premere i tasti ⩓ / ⩔ per selezionare la linea del menu
- Premere i tasti ⟨ / ⟩ per la regolazione o la selezionz di un elemento del menu

2.2 Linee Service Menu

Set-up lines (INIT,STANDARD,OSDCONTR) -
Geometry lines (HS,VS, VA, SC,VSH)
Video lines (CL, BLORS/BLORP,BLOGS/BLOGP,WPRS/WPRP,WPGS/WPGP, WPBS/WPBP, PWS/PWP, BKS, YD) - **IF lines** (TOP) -
Videoprocessor (CD0, CD1, SYN0, SYN1, DEF,VI0,VI1,SOUND,CONT0, CONT1,FEAT0).

2.3 Attivazione di una linea :

La prima linea (1) è continuamente visualizzata. La selezione delle linee sucessive (2) o (3) è possibile in service menu premendo i tasi ⩓ / ⩔.
la linea selezionata sarà visualizzata di colore giallo.

3. Taratura della funzione scelta e memorizzazione

3.1 Il valore momentaneo della funzione scelta viene indicato in formato esadecimale a destra, accanto alla posizione da allineare e può essere cambiato con il pulsante ⟨ / ⟩ del telecomando.
3.2 I valori verranno memorizzati nella memoria num quando verrà lasciato il menù service mode.
3.3 Premere il tasto "**Exit**" per uscire da qualsiasi Service Sub Menu.

4. Uscita temporanea dal Service Mode

4.1 Premere Exit sul telecomando.
Al menu di uso quotidiano si accede attraverso il pulsante Menu.
4.2 Il Service Setup Sub Menu è accessibile attraverso il tasto "**Magenta**".

5. Disattivazione del Service-Mode

5.1 Per disattivare il Service Mode, commutare l'apparecchio in stand-by o spegnerlo con l'interruttore di rete.

MODO SERVICIO (E)

Se necesita el MODO SERVICIO para ajustar el aparato. Todos los ajustes se hacen con el mando a distancia (a excepción de la tensión del sistema, los ajustes del foco y las tensiones de la rejilla de pantalla).

1. Ajustar el Modo Servicio

1.1 Con el mando a distancia conectar a STANDBY el televisor.
1.2 Desconectar el aparato con el interruptor de la red (esperar hasta que el LED se apague).
1.3 Mientras mantiene pulsado el botón "**Magenta** (texto)" de la UCR, pulse el interruptor general de red para encender el televisor.
Mantenga pulsado el botón "**Magenta** (texto)" hasta que aparezca el submenú de la configuración del servicio.

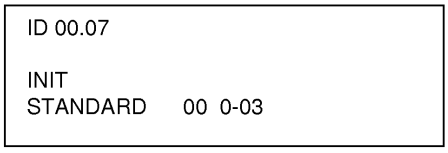

2. Menú Servicio.

2.1 Desplazamiento
- Pulse el botón ⩓ / ⩔ para seleccionar la línea del menú.
- Pulse el botón ⟨ / ⟩ para ajustar o seleccionar una opción del menú.

2.2 Líneas del menú del Modo Servicio
Set-up lines (INIT,STANDARD,OSDCONTR) -
Geometry lines (HS,VS, VA, SC,VSH)
Video lines (CL, BLORS/BLORP,BLOGS/BLOGP,WPRS/WPRP,WPGS/WPGP, WPBS/WPBP, PWS/PWP, BKS, YD) - **IF lines** (TOP) -
Videoprocessor (CD0, CD1, SYN0, SYN1, DEF,VI0,VI1,SOUND,CONT0, CONT1,FEAT0).

2.3 Activación de una línea :
La primera línea (1) se muestra siempre en la pantalla. La selección secuencial de las líneas (2) y (3), es posible pulsando las teclas ⩓ / ⩔ .
La línea seleccionada es la que está en color amarillo

3. Ajuste de la función elegida y almacenamiento

3.1 El valor momentáneo de la función elegida es indicado de modo hexadecimal a la derecha, al lado de la posición a ajustar, y puede cambiarse con la tecla ⟨ o bien ⟩ en el mando a distancia.
3.2 Los valores serán memorizados en la EEPROM al salir del menú del Modo Servicio.
3.3 Pulse el botón "**Exit**" para salir de cualquier submenú Servicio.

4. Salida temporal del Modo Servicio

4.1 Pulse Salir en el mando a distancia.
Con el botón Menu puede acceder al menú de uso cotidiano.
4.2 Puede acceder al submenú de configuración del servicio mediante el botón "**Magenta**".

5. Salir del Modo Servicio

5.1 Conmute el aparato a STANDBY a fin de salir del MODO SERVICIO o desconectar con el interruptor de la red.

ALIGNMENT PROCEDURE - PROCESSUS DE REGLAGES - ABGLEICH - VISUALIZZAZIONE DEL VALORE DI REGOLAZIONE - PROCEDIMIENTO DE ALINEACION

SET-UP LINES

ID	02.11	
INIT		
STANDARD*	00	0-03
KEY	◀ **OFF**	**OFF-ON** ▶
OSDCONTR	03	0-0F
WBF-R*	88	0-FF
SOC1-0	2F	0-3F
OIFP**	20	0-3F

ID 00.07

INIT

Initialise TV set.
Sets all Service Mode functions stored in the EEprom to their default values.
See below the default values table.

⚠ "INIT" copy all service parameters from the ROM to EEprom. It will be necessary in this case to readjust most of the service mode functions.

⚠ "INIT" copie toutes les valeurs par défaut stockées en ROM vers l'EEprom.Il peut être nécessaire dans ce cas de reprendre la plupart des réglages du mode service.

⚠ "INIT" kopiert alle Service-Parameter aus dem ROM in das EEPROM. Es ist anschliessend notwendig die meisten Service-Funktionen neu abzugleichen

⚠ "INIT" copia tutti i parametri di servizio dalla ROM alla EEprom. Sarà necessario in seguito regolare alcune funzioni in Service Mode.

⚠ "INIT" copia todos los valores por defecto memorizados en la ROM hacia la EEPROM. Puede ser necesario en el caso de tener que reajustar la mayor parte de los ajustes en Modo Servicio

STANDARD
RF Norm Group Selection

00	**EU**	BG / LL'
01	**FR**	LL' / BG
02	**UK**	PAL I only
03	**DK**	DKK' PAL, SECAM

ROM Default Value :
TX 807 C / CS Europe : 00 EU

KEY	Key lock ON,OFF... Default value : OFF
OSDCONTR **Full-page video text contrast**	factory Setting OSDCONTR = 03H
WBF-R* **Timing of "wide blanking"**	factory Setting WBF-R = 88H
SOC1-0 **Peak White Limiting**	Specific TDA9554PS (UOC-N2) factory Setting SOC1=2FH
OIF **Offset IF demodulator**	Specific TDA9554PS (UOC-N2) factory Setting OIF=20H

V-Slope

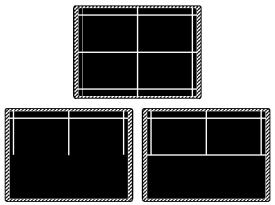

Correct incorrect

GEOMETRY LINES*

HS	20	0-3F
VS	◀ **1A**	**0-3F** ▶
VA	20	0-3F
SC	10	0-3F
VSH	20	0-3F

HS

VS
V_Slope

- Apply a test pattern signal to the TV with a single horizontal and vertical line on the screen.
- Select the "**VS**" line of the menu. The bottom half of the screen will go black.
- Adjust VS until the centre line of the pattern is just invisible.
- Leave the line "**V_Slope**".
- Switch the test pattern signal to the crosshatch geometry pattern.
- Perform the geometry adjustments described below.

- Appliquer une mire de barres avec seulement une ligne blanche horizontale en milieu de l'écran.
- Sélectionner la ligne "**V-Slope**". La moitié basse de l'écran devient noire.
- Aligner "**V_Slope**" pour que la ligne médiane soit à peine non visible.
- Commuter la mire en mode de réglage de géométrie (quadrillage).
- Effectuer les reglages de geometrie ci- après.

- Speisen Sie ein Testbild mit einem horizontalen Strich in der Bildmitte ein.
- Wählen Sie im Menü die Funktion "V-Slope" an. Die untere Bildhälfte wird dunkel.
- Stellen Sie "V-Slope" so ein, daß die Mittellinie fast verschwindet.
- Verlassen Sie die Funktion "V-Slope".
- Speisen Sie ein Gittertestbild ein.
- Nehmen Sie die Geometrieeinstellungen wie nebenstehend beschrieben vor.

- Applicare un monoscopio con un'unica linea bianca orizzontale al centro dello schermo
- Selezionare la riga "**V slope**" del menu. La parte bassa dello schermo viene oscurata.
- Allineare la "Vertical Slope" in modo che la linea centrale sia appena visibile
- Abbandonare la riga "**V slope**".
- Posizionare il monoscopio
- Effettuare le regolazioni di geometria descritte in precedenza
- Memorizzare.

- Aplique una carta de ajuste con sólo una línea blanca horizontal y una vertical en el centro de la pantalla.
- Seleccionar en el menú, la línea "**V-Slope**". La mitad inferior de la pantalla se pondrá oscura.
- Ajuste "**V-Slope**" justo hasta que la línea horizontal sea invisible.
- Cambiar la carta de ajuste a "cuadrícula" y efectuar los ajustes de geometria descritos a continuación
- Antes de salir, memorizar con "Store"

VA

SC
S-Correction

VSH

* According to software version.
** " S " : Video signal received is SECAM.
" P " : Video signal received is PAL.

VIDEO LINES

CL	◀ **00**	**0-0F** ▶
BLORS*	08	0-0F
BLOGS*	08	0-0F
WPRS*	20	0-3F
WPGS*	20	0-3F
WPBS*	20	0-3F
PWS*	20 20 20	0-3F
BKS*	ON	OFF-ON
YD	08	0-0F

CL
Cathode Level

Factory setting.
Extension of the peak White range.

Réglage usine.
Extension des valeurs de réglages du Peak White.

Fabrik-Einstellung (Umfang des Spitzenweiß Einbereiches)

Factory Setting.
Extension of the peak White range.

Ajuste de fábrica
Extensión del margen del Peak White.

Cut-off **

BLORS / BLORP
Black Level Offset Red SECAM/PAL

BLOGS / BLOGP
Black Level Offset Green SECAM/PAL

☼ + ◔ + ◑ = 50%
Grey scale test pattern
white =100%
grey

Drive**

WPRS / WPRP
White Point Red SECAM/PAL

WPGS / WPGP
White Point Green SECAM/PAL

WPBS / WPBP
White Point Blue SECAM/PAL

☼ + ◔ + ◑ = 50%
Grey scale test pattern
white =100%
white

PWS / PWP**

Peak White SECAM/PAL

☼ + ◔ + ◑ = 50%
colourimeter

Sets	Nits	Sets	Nits
10"	500	21"OT	420
14"	450	21"MP 90°	450
17"	450	25"MP 110°	400
20"FB	450	28"MP 110°	300

BKS
Black Stretch

Factory Setting

YD
Luminance Delay

Use ◁▷ to adapt the image

**Perform the G2 and the Focus settings beforehand.*
Effectuez au préalable les réglages de G2 et de focus.
Stellen Sie zuvor G2 und "Focus" ein.
Effetuare le regolazioni G2 e del Fuoco innanzitutto.
Efectuar previamente los ajustes de G2 y Foco

** Adjust separate for PAL / SECAM
" S " : Video signal received is SECAM.
" P " : Video signal received is PAL.

IF LINES

TOP	◀ **20**	**0-0F** ▶
FFI	**00**	**0-01**
ACL*	**00**	**0-01**

TOP
AGC - Take Over

- Minimum noise- Minimum de bruit
- Minimum Rauschen - Rumore minimo
- Mínimo ruido

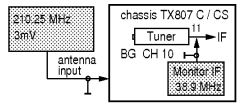

- Set TOP to 00
- Adjust TOP for maximum gain of IF signal.
- Reduce IF level about 8dB.

ROM Defaut Value : AGC : 20

FFI*
Fast Filter IF-PLL

Fast Filter (IF / PLL)
Filtre rapide (FI / PLL)
Schnelles Filter (ZF / PLL)
Filtro /rapido (IF / PLL)
00 : Europ
Factory Setting.

ACL*
Automatic Colour limiting

Factory Setting.
ACL=00

VIDEO PROCESSOR LINES

CD0	84	0-FF
CD1	00	0-0F
SYN0	◀ **30**	**0-FF** ▶
SYN1	08	0-FF
DEF	00	0-0F
VI0	00	0-0F
VI1	00	0-0F
SOUND	00	0-FF
CONT0	46	0-FF
CONT1	00	0-0F
SOUND1	00	0-FF
FEAT0	00	0-01
FEAT1	00	0-01
LOCK	00	0-01
LIMIT	00	0-01

CD0 **CD1**	- Colour Decoder 0 = 84 - Colour Decoder 1 **mono sets: CD1 = 80H** **stereo sets: CD1 = 00H** Factory Setting.
SYN0 **SYN1**	- Syncronisation 0 = 30 - Syncronisation 1 = 1C Factory Setting.
DEF	- Deflection = 00 Factory Setting.
VI0 **VI1**	- Vision IF 0 = 40 - Vision IF 1 = 00 Factory Setting.
SOUND	- Sound = 00 Factory Setting.
CONT0 **CONT0**	- Control 0 = 40 - Control 1 = 00 Factory Setting.
FEAT0	- Features 0 = 00 Factory Setting.

* According to software version.

DEFAULT VALUES

OSD	DESCRIPTION	DEFAULT VALUE (HEX)
ID	Software	
INIT	Initialise TV set	
STANDARD	RF Norm Group Selection	0 (EU)
KEY	Key Lock	OFF
OSDCONTR	OSD Contrast	03
WBF-R	Timing of wide blanking	88
SOC1-0	Peak White Limiting	08
OIFS	Offset IF demodulator	20
FR	France	00
HS	Horizontal Shift	20
VS	Vertical Slope	1A
VA	Vertical Amplitude	20
SC	S-Correction	10
VSH	Vertical Shift	20
CL	Cathode Level	00
BLORS	Black Level Offset Red SECAM	8
BLORP	Black Level Offset Red PAL	8
BLOGS	Black Level Offset Green SECAM	8
BLOGP	Black Level Offset Green SECAM	8
WPRS	White Point Red SECAM	20
WPRP	White Point Red PAL	20
WPGS	White Point Green SECAM	20
WPGP	White Point Green PAL	20
WPBS	White Point Blue SECAM	20
WPBP	White Point Blue PAL	20
PWS	Peak White SECAM	20
PWP	Peak White PAL	20
BKS	Black Stretch	01
YD	Luminance Delay	08
TOP	AGC Take-Over	20
FFI	Fast Filter IF-PLL	00
ACL	Automatic Colour limiting	00
CD0	Colour Decoder 0	84
CD1	Colour Decoder 1	Mono : 80 Stereo: 00
SYN0	Synchronisation 0	30
SYN1	Synchronisation 1	1C
DEF	Deflection	00
VI0	Vision IF 0	40
VI1	Vision IF 1	00
SOUND	Sound	00
CONT0	Control 0	40
CONT1	Control 1	00
FEAT0	Features 0	00

GEOMETRY MODE ALIGNMENT

90° tube

Signal : 50 Hz - 4/3 test pattern

4 / 3 **standard mode**	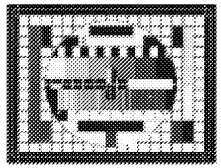	**Overscan V=107% , H=107%** 1 - Adjust Horizontal Centering (HS) 2 - Adjust Vertical centering (VSH) and Vertical amplitude 107% (VA) 3 - Adjust Vertical Slope (VS) and linearity (SC) 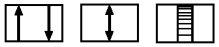 4-If necessary repeat VSH, VA alignment to 7% overscan.

110° tube

Signal : 50 Hz - 4/3 test pattern

4 / 3 **standard mode**	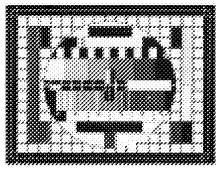	**Overscan V=107% , H=107%** **EAST-WEST MODULE** 1 - **PL140** : Turn fully counterclockwise. **MAIN BOARD** 2 - Adjust Horizontal Centering (HS) 3 - Adjust Vertical centering (VSH) and Vertical amplitude 107% (VA) 4 - Adjust Vertical Slope (VS) and linearity (SC) 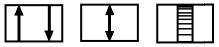 5 - If necessary repeat VSH, VA alignment to 7% overscan. **EAST-WEST MODULE** 6 - **PL140** : Adjust Horizontal amplitude with PL140 for optimum oversc 7 - **PL141** :Adjust Pincushion. 8 - **PL143** : Adjust Trapezium 9 -If necessary repeat Horizontal amplitude, pincushion correction and trapezium alignment

LOCATION OF CONTROLS - EMPLACEMENT DES REGLAGES - LAGEPLAN EINSTELLER - POSIZIONE REGULATORI DI SERVIZIO - SITUACIÓN DE LOS AJUSTES

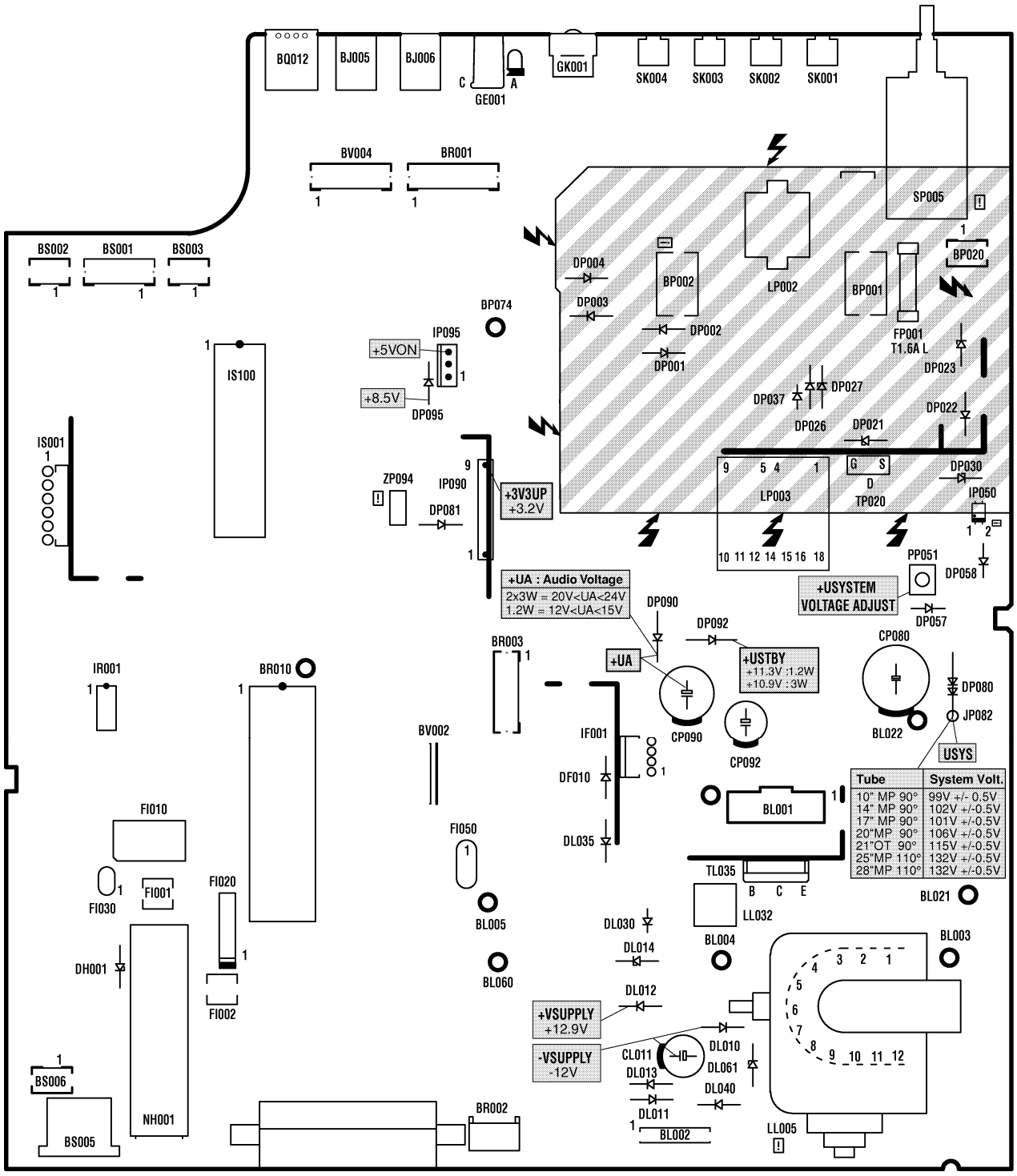

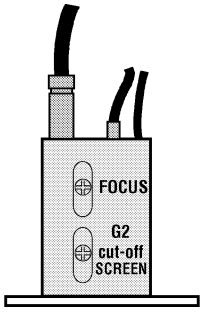

Part of board connected to mains supply.
Partie du châssis reliée au secteur.
Primärseite des Netzteils.
Parte dello châssis collegata alla rete.
Parte del chasis conectada a la red

Use isolating mains transformer -
Utiliser un transformateur isolateur du secteur -
Trenntrafo verwenden -
Utilizar un transformador aislador de red -
Utilizzare un transformatore per isolarvi dalla rete

ADJUSTMENTS - REGLAGES - EINSTELLUNGEN - REGOLAZIONE - AJUSTES

U G2 / CUTOFF	LL05	Peak white pattern + + = 50%	highest output CRT IB01: Pins 9 / 8 / 7	V 0 140V: with IV001: TDA9554PS
FOCUS	LL05	Contrast = 100% Brightness = 0% Test pattern (standard values)		Sharp picture
MAIN **SYSTEM VOLTAGE** **+USYS**	PP051	+ + = 50% TV to AV : Black tes pattern AV	DP 080 +USYS CP80 V	

Tube	V Cutt-off
10" MP 90°	125V +/- 3V
14" MP 90°	125V +/- 3V
17" MP 90°	125V* +/- 3V
20" MP 90°	125V* +/- 3V
21" MP 90°	125V* +/- 3V
21" OT 90°	125V* +/- 3V
25" MP110°	125V* +/- 3V

Tube	Usys	RL090	JL981-982	JL991-992
10" MP 90°	98V +/- 0.5V	76k8	JL981	JL992
14" MP 90°	101V +/-0.5V	76k8	JL982	JL992
17" MP 90°	101V +/-0.5V	76k8	JL982	JL991
20"MP 90°	106V +/-0.5V	86k6	JL981	JL992
21"OT 90°	114V +/-0.5V	95k3	JL982	JL992
25"MP 110°	132V +/-0.5V	127k	JL982	JL992
28"MP 110°	132V +/-0.5V	127k	JL982	JL992

EAST-WEST MODULE - MODULE EST-OUEST - OST-WEST-MODUL - MODULO EST-OVEST - MODULO ESTE-OESTE

GEOMETRY	TV : AV1 Test pattern Standard TV - Settings : + + = 50%		Correct picture
EWM	PL140 PL141 PL143 SERVICE MODE	GB	- Please refer to geometry Mode alignment (110° tube) , page 7, to adjust the East West Module (EWM).
		F	- Se référer à la méthode d'alignement des géometries (tubes 110°), page 7 pour effectuer les réglages du Module Est-Ouest (EWM).
		D	- Abgleich des Ost-West-Modules: Siehe Geometrie-Abgleich (110°), Seite 7.
		I	- Per le regolazioni del Modulo Est-Ovest fare riferimnto al modo allineamento geometria (tubi 110°), pagina 7.
		E	- Para los ajustes del módulo Este-Oeste (EWM) ver la página 7, modo ajuste geometría (tubo 110º)
			PL140 PL141 PL143

LOCATION OF CONTROLS - EMPLACEMENT DES REGLAGES - LAGEPLAN EINSTELLER - POSIZIONE REGULATORI DI SERVIZIO - SITUACIÓN DE LOS AJUSTES

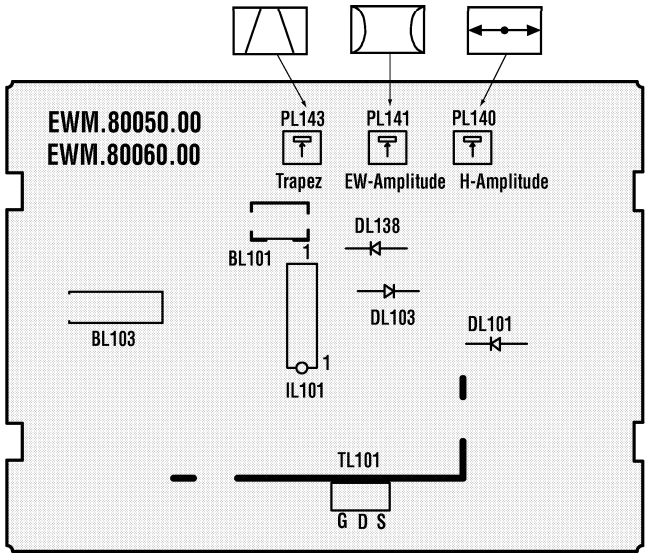

SERVICE-MODE GB

It is necessary to enter the Service Mode in order to carry out alignment of the TV set. Most adjustments can be made with the RCU, except the Focus and Screen voltages.

1. Service Mode Access

1.1 With the RCU, switch the TV set into the "**Standby**" mode.
1.2 Switch "**Off**" the TV set by mains supply switch (wait until LED is dark).
1.3 Whilst pressing the "**Magenta** (text)" button on the RCU switch "**On**" the TV set using the mains switch.
Continue to press the "**Magenta** (text)" button until the Service-setup Sub-menu appears.

ID 00.07	*(1)*
INIT ◁ ▷	*(2)*
STANDARD 00 0-03	*(3)*

2. Service Menu

2.1 Navigation

- Press the ⩓ / ⩔ buttons to select the menu line.
- Press the ⟨ / ⟩ buttons to make adjustments or selection of a menu item.

2.2 Service-Menu lines

Set-up lines (INIT,STANDARD,OSDCONTR) -
Geometry lines (HS,VS, VA, SC,VSH)
Video lines (CL, BLORS/BLORP,BLOGS/BLOGP,WPRS/WPRP,WPGS/WPGP, WPBS/WPBP, PWS/PWP, BKS, YD) -
IF lines (TOP) -
Video processor (CD0, CD1, SYN0, SYN1, DEF,VI0,VI1,SOUND,CONT0, CONT1,FEAT0).

2.3 Activation of a line :

The first line (1) is continuously displayed. Sequential selection of the others lines in the Service Menu is possible by pressing the ⩓ / ⩔ buttons on the RCU. The selected line will be highlighted in YELLOW text.

3. Alignment and storing new function value

3.1 The current value of the selected function is displayed in a hexadecimal form to the right of the function name. This value is adjusted by means of the RCU ⟨ / ⟩ buttons.
3.2 The values will be stored in the non-volatile memory when leaving the service menu.
3.3 To leave the Service menu press the "**Exit**" button on the RCU.

4. Temporary exit from Service Mode

4.1 To temporary leave the Service Mode, press the "**Exit**" button on the RCU. To access the everyday menus, press the "**Menu**" button on the RCU.
4.2 To return to the Service Menu, press the "**Magenta**" button on the RCU

5. Leaving the Service Mode

5.1 To **EXIT** the Service Menu either press, the "**Standby**" button on the RCU or switch "**Off**" the mains supply to the TV.

MODE SERVICE F

Le mode service sert au réglage de l'appareil. Toutes les opérations de réglage s'effectuent à l'aide de la télécommande (sauf les réglages de Focus et de tension de grille-écran).

1. Accès au mode service

1.1 Commuter le téléviseur en position de veille avec la télécommande.
1.2 Eteindre le téléviseur par l'interrupteur secteur (attendre l'extinction complète du voyant).
1.3 Maintenir la touche "**Magenta** (text)" enfoncée et mettre simultanément le téléviseur en marche avec l'interrupteur secteur.
Ne pas relacher la touche "**Magenta** (text)" jusqu'à apparition du menu

ID 00.07	*(1)*
INIT	*(2)*
STANDARD 00 0-03	*(3)*

2. Menu Service

2.1 Déplacement

- Appuyer sur la touche ⩓ / ⩔ pour sélectionner une ligne de menu.
- Appuyer sur la touche ⟨ / ⟩ pour un réglage ou une sélection d'une option.

2.2 Lignes de Menus du mode service

Set-up lines (INIT,STANDARD,OSDCONTR) -
Geometry lines (HS,VS, VA, SC,VSH)
Video lines (CL, BLORS/BLORP,BLOGS/BLOGP,WPRS/WPRP,WPGS/WPGP, WPBS/WPBP, PWS/PWP, BKS, YD) - **IF lines** (TOP) -
Videoprocessor (CD0, CD1, SYN0, SYN1, DEF,VI0,VI1,SOUND,CONT0, CONT1,FEAT0).

2.3 Sélection d'une ligne:

La premières ligne (1) du menu est toujours affichée.
De courtes pressions sur la touche "⩓ / ⩔" sélectionnent séquentiellement les lignes (2) ou (3) du menu de service.
La ligne activée est de couleur jaune.

3. Réglage des fonctions sélectionnées; mémorisation

3.1 La valeur momentanée de la fonction sélectionnée est indiquée sous forme hexadécimale à droite, à coté de la position à régler et peut être modifiée avec la télécommande par la touche ⟨ / ⟩ .
3.2 La valeur de réglage est mémorisée dans la mémoire non volatile en sortie de mode service.
3.3 Appuyer sur la touche "**Exit**" pour sortir d'un sous-menu.

4. Sortie temporaire du mode service

4.1 Utiliser la touche "**Exit**" de la télécommande.
Le menu utilisateur peut-être accesible via la touche "**Menu**".
4.2 Pour entrer à nouveau dans le Menu Setup utiliser la touche magenta.

5. Sortie du mode service

5.1 Pour sortir du mode service, commuter le téléviseur en position de veille ou le mettre hors service par l'interrupteur secteur.

SERVICE-MODE D

Der Service-Mode wird für den Geräteabgleich benötigt. Alle Einstellungen erfolgen mit der Fernbedienung (bis auf Fokuseinstellung und Schirmgitterspannung).

1.Service-Mode einschalten

1.1 Mit der Fernbedienung das Fernsehgerät in Stand-by schalten.
1.2 Das Gerät mit dem Netzschalter ausschalten (warten bis LED dunkel ist)
1.3 Während Sie die margentafarbene Taste **(text)** auf der Fernbedienung gedrückt halten, schalten Sie das Gerät mit dem Netzschalter ein. Halten Sie die margentafarbene Taste solange gedrückt bis das Service Setup Sub-Menü erscheint.

ID 00.07	*(1)*
INIT	*(2)*
STANDARD 00 0-03	*(3)*

2. Service Menü

2.1 Navigation

-Drücken Sie die Tasten ⩓ / ⩔ zum Auswählen der Menüzeile.
-Drücken Sie die ⟨ / ⟩ -Tasten um eine Menüfunktion anzuwählen oder abzugleichen.

2.2 Service-Menü Zeilen

Set-up lines (INIT,STANDARD,OSDCONTR) -
Geometry lines (HS,VS, VA, SC,VSH)
Video lines (CL, BLORS/BLORP,BLOGS/BLOGP,WPRS/WPRP,WPGS/WPGP, WPBS/WPBP, PWS/PWP, BKS, YD) - **IF lines** (TOP) -
Videoprocessor (CD0, CD1, SYN0, SYN1, DEF,VI0,VI1,SOUND,CONT0, CONT1,FEAT0).

2.3 Aktivierung einer Menüzeile:

Die erste Zeile (1) wird ständig angezeigt. Die Anwahl der Zeilen (2) und (3) im Service-Menü ist durch Drücken der ⩓ / ⩔ - Tasten möglich.
Die gewählte Zeile wird in gelber Farbe dargestellt.

3. Abgleich der gewählten Funktion und Speichern

3.1 Der momentane Wert der gewählten Funktion wird hexadezimal rechts neben der abzugleichenden Position angegeben und kann mit der Taste ⟨ / ⟩ auf der Fembedienung verändert werden.
3.2 Die Werte werden nach dem Verlassen des Service-Menüs im nichtflüchtigen Speicher (EEPROM) abgelegt.
3.3 Drücken Sie "**Exit**" zum Verlassen eines Service Sub-Menüs.

4. Vorübergehendes verlassen des Service-Mode

4.1 Auf der Fernbedienung Exit drücken.
Mit der Tasten Menü gelangen Sie zum Menü-Übersicht.
4.2 Durch Drücken der margentafarbenen Taste gelangen Sie in das Service Setup Sub-Menü.

5. Service-Mode verlassen

5.1 Zum Verlassen des Service-Mode das Gerät in Stand By schalten oder mit dem Netzschalter ausschalten.

MODO SERVICIO E

Se necesita el MODO SERVICIO para ajustar el aparato. Todos los ajustes se hacen con el mando a distancia (a excepción de la tensión del sistema, los ajustes del foco y las tensiones de la rejilla de pantalla).

1. Ajustar el Modo Servicio

1.1 Con el mando a distancia conectar a STANDBY el televisor.
1.2 Desconectar el aparato con el interruptor de la red (esperar hasta que el LED se apague).
1.3 Mientras mantiene pulsado el botón "**Magenta** (texto)" de la UCR, pulse el interruptor general de red para encender el televisor.
Mantenga pulsado el botón "**Magenta** (texto)" hasta que aparezca el submenú de la configuración del servicio.

ID 00.07	*(1)*
INIT	*(2)*
STANDARD 00 0-03	*(3)*

2. Menú Servicio.

2.1 Desplazamiento
- Pulse el botón ⩓ / ⩔ para seleccionar la línea del menú.
- Pulse el botón ⟨ / ⟩ para ajustar o seleccionar una opción del menú.

SERVICE-MODE I

Il Service-Mode è necessario per l'allineamento dell'apparecchio. Tutte le regolazioni si effettuano con il telecomando. (tranne le regolazionu del fuoco e le tensioni della griglia schermo).

1. Attivazione del Service-Mode

1.1 Commutare il televisore in stand-by con il telecomando.
1.2 Spegnere l'apparecchio con l'interruttore di rete (attendere finchè il LED è spento)
1.3 Mentre tenete premuto il pulsante "**Magenta** (testo)" del RCU, accendete il televisore utilizzando l'interruttore di rete. Continuate a premere il pulsante "**Magenta** (testo)" del RCU fino all'apparizione del Service Setup Sub Menu

ID 00.07	*(1)*
INIT	*(2)*
STANDARD 00 0-03	*(3)*

2. Service Menu

2.1 Navigazione

- Premere i tasti ⩓ / ⩔ per selezionare la linea del menu
- Premere i tasti ⟨ / ⟩ per la regolazione o la selezionz di un elemento del menu

2.2 Linee Service Menu

Set-up lines (INIT,STANDARD,OSDCONTR) -
Geometry lines (HS,VS, VA, SC,VSH)
Video lines (CL, BLORS/BLORP,BLOGS/BLOGP,WPRS/WPRP,WPGS/WPGP, WPBS/WPBP, PWS/PWP, BKS, YD) - **IF lines** (TOP) -
Videoprocessor (CD0, CD1, SYN0, SYN1, DEF,VI0,VI1,SOUND,CONT0, CONT1,FEAT0).

2.3 Attivazione di una linea :

La prima linea (1) è continuamente visualizzata. La selezione delle linee sucessive (2) o (3) è possibile in service menu premendo i tasi ⩓ / ⩔.
la linea selezionata sarà visualizzata di colore giallo.

3. Taratura della funzione scelta e memorizzazione

3.1 Il valore momentaneo della funzione scelta viene indicato in formato esadecimale a destra, accanto alla posizione da allineare e può essere cambiato con il pulsante ⟨ / ⟩ del telecomando.
3.2 I valori verranno memorizzati nella memoria num quando verrà lasciato il menù service mode.
3.3 Premere il tasto "**Exit**" per uscire da qualsiasi Service Sub Menu.

4. Uscita temporanea dal Service Mode

4.1 Premere Exit sul telecomando.
Al menu di uso quotidiano si accede attraverso il pulsante Menu.
4.2 Il Service Setup Sub Menu è accessibile attraverso il tasto "**Magenta**".

5. Disattivazione del Service-Mode

5.1 Per disattivare il Service Mode, commutare l'apparecchio in stand-by o spegnerlo con l'interruttore di rete.

2.2 Líneas del menú del Modo Servicio
Set-up lines (INIT,STANDARD,OSDCONTR) -
Geometry lines (HS,VS, VA, SC,VSH)
Video lines (CL, BLORS/BLORP,BLOGS/BLOGP,WPRS/WPRP,WPGS/WPGP, WPBS/WPBP, PWS/PWP, BKS, YD) - **IF lines** (TOP) -
Videoprocessor (CD0, CD1, SYN0, SYN1, DEF,VI0,VI1,SOUND,CONT0, CONT1,FEAT0).

2.3 Activación de una línea :
La primera línea (1) se muestra siempre en la pantalla. La selección secuencial de las líneas (2) y (3), es posible pulsando las teclas ⩓ / ⩔ .
La línea seleccionada es la que está en color amarillo

3. Ajuste de la función elegida y almacenamiento

3.1 El valor momentáneo de la función elegida es indicado de modo hexadecimal a la derecha, al lado de la posición a ajustar, y puede cambiarse con la tecla ⟨ o bien ⟩ en el mando a distancia.
3.2 Los valores serán memorizados en la EEPROM al salir del menú del Modo Servicio.
3.3 Pulse el botón "**Exit**" para salir de cualquier submenú Servicio.

4. Salida temporal del Modo Servicio

4.1 Pulse Salir en el mando a distancia.
Con el botón Menu puede acceder al menú de uso cotidiano.
4.2 Puede acceder al submenú de configuración del servicio mediante el botón "**Magenta**".

5. Salir del Modo Servicio

5.1 Conmute el aparato a STANDBY a fin de salir del MODO SERVICIO o desconectar con el interruptor de la red.

ALIGNMENT PROCEDURE - PROCESSUS DE REGLAGES - ABGLEICH - VISUALIZZAZIONE DEL VALORE DI REGOLAZIONE - PROCEDIMIENTO DE ALINEACION

SET-UP LINES

ID	02.11	
INIT		
STANDARD*	00	0-03
KEY	◀ **OFF**	**OFF-ON** ▶
OSDCONTR	03	0-0F
WBF-R*	88	0-FF
SOC1-0	2F	0-3F
OIFP**	20	0-3F

ID 00.07

INIT
Initialise TV set.
Sets all Service Mode functions stored in the EEprom to their default values.
See below the default values table.

⚠ "INIT" copy all service parameters from the ROM to EEprom. It will be necessary in this case to readjust most of the service mode functions.

⚠ "INIT" copie toutes les valeurs par défaut stockées en ROM vers l'EEprom.Il peut être nécessaire dans ce cas de reprendre la plupart des réglages du mode service.

⚠ "INIT" kopiert alle Service-Parameter aus dem ROM in das EEPROM. Es ist anschliessend notwendig die meisten Service-Funktionen neu abzugleichen

⚠ "INIT" copia tutti i parametri di servizio dalla ROM alla EEprom. Sarà necessario in seguito regolare alcune funzioni in Service Mode.

⚠ "INIT" copia todos los valores por defecto memorizados en la ROM hacia la EEPROM. Puede ser necesario en el caso de tener que reajustar la mayor parte de los ajustes en Modo Servicio

STANDARD
RF Norm Group Selection

00	**EU**	BG / LL'
01	**FR**	LL' / BG
02	**UK**	PAL I only
03	**DK**	DKK' PAL, SECAM

ROM Default Value :
TX 807 C / CS Europe : 00 EU

KEY	Key lock ON,OFF... Default value : OFF
OSDCONTR **Full-page video text contrast**	factory Setting OSDCONTR = 03H
WBF-R* **Timing of "wide blanking"**	factory Setting WBF-R = 88H
SOC1-0 **Peak White Limiting**	Specific TDA9554PS (UOC-N2) factory Setting SOC1=2FH
OIF **Offset IF demodulator**	Specific TDA9554PS (UOC-N2) factory Setting OIF=20H

V-Slope

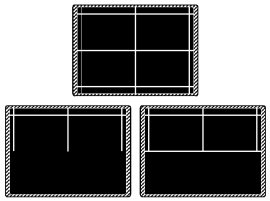

Correct incorrect

GEOMETRY LINES*

HS	20	0-3F
VS	◀ **1A**	**0-3F** ▶
VA	20	0-3F
SC	10	0-3F
VSH	20	0-3F

HS

VS
V_Slope

- Apply a test pattern signal to the TV with a single horizontal and vertical line on the screen.
- Select the "**VS**" line of the menu. The bottom half of the screen will go black.
- Adjust VS until the centre line of the pattern is just invisible.
- Leave the line "**V_Slope**".
- Switch the test pattern signal to the crosshatch geometry pattern.
- Perform the geometry adjustments described below.

- Appliquer une mire de barres avec seulement une ligne blanche horizontale en milieu de l'écran.
- Sélectionner la ligne "**V-Slope**". La moitié basse de l'écran devient noire.
- Aligner "**V_Slope**" pour que la ligne médiane soit à peine non visible.
- Commuter la mire en mode de réglage de géométrie (quadrillage).
- Effectuer les reglages de geometrie ci- après.

- Speisen Sie ein Testbild mit einem horizontalen Strich in der Bildmitte ein.
- Wählen Sie im Menü die Funktion "V-Slope" an. Die untere Bildhälfte wird dunkel.
- Stellen Sie "V-Slope" so ein, daß die Mittellinie fast verschwindet.
- Verlassen Sie die Funktion "V-Slope".
- Speisen Sie ein Gittertestbild ein.
- Nehmen Sie die Geometrieeinstellungen wie nebenstehend beschrieben vor.

- Applicare un monoscopio con un'unica linea bianca orizzontale al centro dello schermo
- Selezionare la riga "**V slope**" del menu. La parte bassa dello schermo viene oscurata.
- Allineare la "Vertical Slope" in modo che la linea centrale sia appena visibile
- Abbandonare la riga "**V slope**".
- Posizionare il monoscopio
- Effettuare le regolazioni di geometria descritte in precedenza
- Memorizzare.

- Aplique una carta de ajuste con sólo una línea blanca horizontal y una vertical en el centro de la pantalla.
- Seleccionar en el menú, la línea "**V-Slope**". La mitad inferior de la pantalla se pondrá oscura.
- Ajuste "**V-Slope**" justo hasta que la línea horizontal sea invisible.
- Cambiar la carta de ajuste a "cuadrícula" y efectuar los ajustes de geometria descritos a continuación
- Antes de salir, memorizar con "Store"

VA

SC
S-Correction

S

VSH

* According to software version.
** " S " : Video signal received is SECAM.
" P " : Video signal received is PAL.

VIDEO LINES

CL	◀ **00**	**0-0F** ▶
BLORS*	08	0-0F
BLOGS*	08	0-0F
WPRS*	20	0-3F
WPGS*	20	0-3F
WPBS*	20	0-3F
PWS*	20 20 20	0-3F
BKS*	ON	OFF-ON
YD	08	0-0F

CL
Cathode Level

Factory setting.
Extension of the peak White range.

Réglage usine.
Extension des valeurs de réglages du Peak White.

Fabrik-Einstellung.
(Umfang des Spitzenweiß Einbereiches)

Factory Setting.
Extension of the peak White range.

Ajuste de fábrica
Extensión del margen del Peak White.

Cut-off **
BLORS / BLORP
Black Level Offset Red SECAM/PAL
BLOGS / BLOGP
Black Level Offset Green SECAM/PAL

☼ + ◑ + ◑ = 50%
Grey scale test pattern
white =100%
grey

Drive**
WPRS / WPRP
White Point Red SECAM/PAL
WPGS / WPGP
White Point Green SECAM/PAL
WPBS / WPBP
White Point Blue SECAM/PAL

☼ + ◑ + ◑ = 50%
Grey scale test pattern
white =100%
white

PWS / PWP**
Peak White SECAM/PAL

☼ + ◑ + ◑ = 50%
colourimeter

Sets	Nits	Sets	Nits
10"	500	21"OT	420
14"	450	21"MP 90°	450
17"	450	25"MP 110°	400
20"FB	450	28"MP 110°	300

BKS
Black Stretch

Factory Setting

YD
Luminance Delay

Use ◀▶ to adapt the image

Perform the G2 and the Focus settings beforehand.
Effectuez au préalable les réglages de G2 et de focus.
Stellen Sie zuvor G2 und "Focus" ein.
Effetuare le regolazioni G2 e del Fuoco innanzitutto.
Efectuar previamente los ajustes de G2 y Foco

** Adjust separate for PAL / SECAM
" S " : Video signal received is SECAM.
" P " : Video signal received is PAL.

IF LINES

TOP	◀ **20**	**0-0F** ▶
FFI	**00**	**0-01**
ACL*	**00**	**0-01**

TOP
AGC - Take Over

- Minimum noise- Minimum de bruit
- Minimum Rauschen - Rumore minimo
- Mínimo ruido

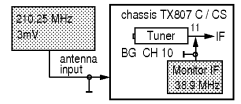

- Set TOP to 00
- Adjust TOP for maximum gain of IF signal.
- Reduce IF level about 8dB.

ROM Defaut Value : AGC : 20

FFI*
Fast Filter IF-PLL

Fast Filter (IF / PLL)
Filtre rapide (FI / PLL)
Schnelles Filter (ZF / PLL)
Filtro /rapido (IF / PLL)
00 : Europ
Factory Setting.

ACL*
Automatic Colour limiting

Factory Setting.
ACL=00

VIDEO PROCESSOR LINES

CD0	84	0-FF
CD1	00	0-0F
SYN0	◀ **30**	**0-FF** ▶
SYN1	08	0-FF
DEF	00	0-0F
VI0	00	0-0F
VI1	00	0-0F
SOUND	00	0-FF
CONT0	46	0-FF
CONT1	00	0-0F
SOUND1	00	0-FF
FEAT0	00	0-01
FEAT1	00	0-01
LOCK	00	0-01
LIMIT	00	0-01

CD0 **CD1**	- Colour Decoder 0 = 84 - Colour Decoder I **mono sets: CD1 = 80H** **stereo sets: CD1 = 00H** Factory Setting.
SYN0 **SYN1**	- Syncronisation 0 = 30 - Syncronisation 1 = 1C Factory Setting.
DEF	- Deflection = 00 Factory Setting.
VI0 **VI1**	- Vision IF 0 = 40 - Vision IF 1 = 00 Factory Setting.
SOUND	- Sound = 00 Factory Setting.
CONT0 **CONT0**	- Control 0 = 40 - Control 1 = 00 Factory Setting.
FEAT0	- Features 0 = 00 Factory Setting.

* According to software version.

DEFAULT VALUES

OSD	DESCRIPTION	DEFAULT VALUE (HEX)
ID	Software	
INIT	Initialise TV set	
STANDARD	RF Norm Group Selection	0 (EU)
KEY	Key Lock	OFF
OSDCONTR	OSD Contrast	03
WBF-R	Timing of wide blanking	88
SOC1-0	Peak White Limiting	08
OIFS	Offset IF demodulator	20
FR	France	00
HS	Horizontal Shift	20
VS	Vertical Slope	1A
VA	Vertical Amplitude	20
SC	S-Correction	10
VSH	Vertical Shift	20
CL	Cathode Level	00
BLORS	Black Level Offset Red SECAM	8
BLORP	Black Level Offset Red PAL	8
BLOGS	Black Level Offset Green SECAM	8
BLOGP	Black Level Offset Green SECAM	8
WPRS	White Point Red SECAM	20
WPRP	White Point Red PAL	20
WPGS	White Point Green SECAM	20
WPGP	White Point Green PAL	20
WPBS	White Point Blue SECAM	20
WPBP	White Point Blue PAL	20
PWS	Peak White SECAM	20
PWP	Peak White PAL	20
BKS	Black Stretch	01
YD	Luminance Delay	08
TOP	AGC Take-Over	20
FFI	Fast Filter IF-PLL	00
ACL	Automatic Colour limiting	00
CD0	Colour Decoder 0	84
CD1	Colour Decoder 1	Mono : 80 Stereo: 00
SYN0	Synchronisation 0	30
SYN1	Synchronisation 1	1C
DEF	Deflection	00
VI0	Vision IF 0	40
VI1	Vision IF 1	00
SOUND	Sound	00
CONT0	Control 0	40
CONT1	Control 1	00
FEAT0	Features 0	00

GEOMETRY MODE ALIGNMENT

90° tube

Signal : 50 Hz - 4/3 test pattern

4 / 3 **standard mode**	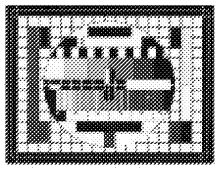	**Overscan V=107% , H=107%** 1 - Adjust Horizontal Centering (HS) 2 - Adjust Vertical centering (VSH) and Vertical amplitude 107% (VA) 3 - Adjust Vertical Slope (VS) and linearity (SC) 4-If necessary repeat VSH, VA alignment to 7% overscan.

110° tube

Signal : 50 Hz - 4/3 test pattern

4 / 3 **standard mode**	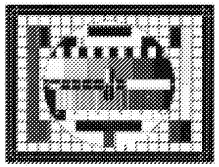	**Overscan V=107% , H=107%** **EAST-WEST MODULE** 1 - **PL140** : Turn fully counterclockwise. **MAIN BOARD** 2 - Adjust Horizontal Centering (HS) 3 - Adjust Vertical centering (VSH) and Vertical amplitude 107% (VA) 4 - Adjust Vertical Slope (VS) and linearity (SC) 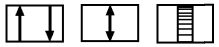 5 - If necessary repeat VSH, VA alignment to 7% overscan. **EAST-WEST MODULE** 6 - **PL140** : Adjust Horizontal amplitude with PL140 for optimum oversc 7 - **PL141** :Adjust Pincushion. 8 - **PL143** : Adjust Trapezium 9 -If necessary repeat Horizontal amplitude, pincushion correction and trapezium alignment

LIST OF ABBREVIATIONS - LISTE DES ABREVIATIONS - ABKÜRZUNGEN
LISTA DELLE ABBREVIAZIONI - LISTA DE ABREVIACIONES

● **BCL**	BEAM CURRENT LIMITING INFORMATION
● **BLACK_I**	BLACK CURRENT INPUT
● **B / B'**	BLUE SIGNAL TO VIDEO AMPLIFIER
● **CVBS**	COMPOSITE VIDEO BASE BAND SIGNAL
● **DEGAUSS**	DEGAUSS SIGNAL
● **DEG-COIL**	DEGAUSS COIL
● **FAULT**	SIGNAL TO DETECT FAULT CONDITION
● **FB**	FAST BLANKING
● **G / G'**	GREEN SIGNAL TO VIDEO AMPLIFIER
● **H / HDRIVE**	DRIVE SIGNAL FOR HORIZONTAL DEFLECTION
● **HTR / HEATER**	HEATER VOLTAGE
● **I_CUT**	CUT OFF CURRENT
● **IR**	DATA FROM INFRARED RECEIVER
● **MUTE**	MUTE AUDIO AMPLIFIER
● **OPTO**	REGULATION SIGNAL GOING TO OPTO COUPLER ON DC-DC POWER SUPPLY MODULE.
● **PO**	POWER ON. SIGNAL FROM MICRO. TO POWER SUPPLY. SWITCHES THE POWER SUPPLY FROM STANDBY TO ON.
● **R / R'**	RED SIGNAL TO VIDEO AMPLIFIER
● **SCL**	SERIAL CLOCK
● **SDA**	SERIAL DATA
● **SLOW_SW**	SLOW SWITCH FROM SCART
● **SOUND_SW**	IF SELECTION CONTROL INPUT
● **UA**	POSITIVE AUDIO VOLTAGE
● **-UA**	AUDIO VOLTAGE GROUND
● **USTBY**	STANDBY VOLTAGE: 11.9V
● **+UB / USYS**	SYSTEM VOLTAGE
● **USYS_MOD**	SIGNAL TO MODULATE USYS
● **UVIDEO**	VIDEO VOLTAGE FOR THE CRT BOARD
● **V _DRIVE**	DRIVE SIGNAL FOR VERTICAL DEFLECTION
● **+VSUPPLY**	12.9V. POSITIVE SUPPLY VOLTAGE FOR VERTICAL POWER AMPLIFIER
● **-VSUPPLY**	10.5 TO 12.5V (DEPENDING ON TUBE TYPE). NEGATIVE SUPPLY VOLTAGE FOR VERTICAL POWER AMPLIFIER 12.9V.
● **VT**	TUNING VOLTAGE
● **+5VON**	SUPPLY VOLTAGE FOR THE MICROPROCESSOR AND AUDIO PART. ONLY PRESENT IN ON MODE.
● **+8V**	SUPPLY VOLTAGE FOR THE MICROPROCESSOR, AUDIO PART AND FOR THE DRIVER PULL-UP RESISTOR
● **+3VUP**	PRESENT IN STANDBY MODE. POWER SUPPLY VOLTAGE FOR THE MICROPROCESSOR. POWER SUPPLY INTERNAL USED AS REFERENCE VOLTAGE FOR THE REGULATION
● **+33V**	TUNER VOLTAGE

INTEGRATED CIRCUITS AND TRANSISTORS OUTLINE - CIRCUITS INTEGRES ET TRANSISTORS INTEGRIERTE SCHALTUNGEN UND TRANSISTOREN - CIRCUITI INTEGRATI TRANSISTOR CIRCUITOS INTEGRADOS Y TRANSISTORES

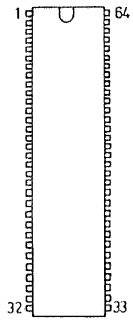

TDA9351N2
TDA9367N1

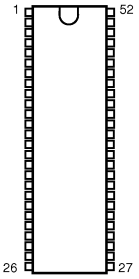

MSP3415D-P0

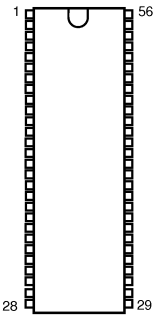

TDA8842

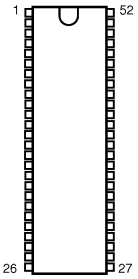

SAA5281ZP/E

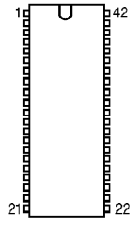

TMP47P1637VN

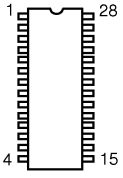

STV5348D

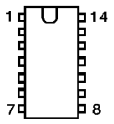

STV8225

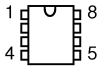

ST24W04
M22W04

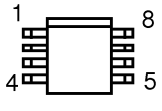

TDA 7267

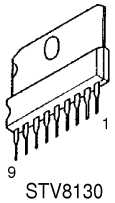

STV8130

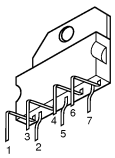

TDA9302H
TDA 9320H

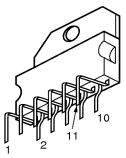

TDA7253
TDA7263

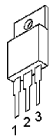

MC7805/ACT
78L09

BC 337
BC337-40
BC 547B/C
BC 548B
BC 558B

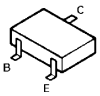

BC846B
BC 847B
BC856B
BC 858 B/C
BC857
BCR141
BCR185
DTC144EK
MMBTH10L
RN1409
RN2417

TT52
BF 422
BF423
2SA1020
2SC2236

BC327

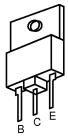

BUH515D
STP3NB90FP

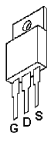

STP3 NA80F1

EACEM-IRIS REPAIR CODING SYSTEM

NDITION DE

MAIN SYMPTOM CODE

EXTENDED SYMPTOM CODE (*1)

	CONSTANTLY
	INTERMITTENTLY
	AFTER A WHILE
	IN A HOT ENVIRONMENT
	IN A COLD ENVIRONMENT
	WHEN SWITCHING
	UNDER VIBRATION
	IN A DAMP/WET/ RAINY/SNOWY ENVIRONMENT
	IN A DRY ENVIRONMENT
	AFTER BEING DROPPED/ TRANSPORT DAMAGE
	AFTER LIGHTNING STRIKE
	ONLY CERTAIN STATIONS/ SOFTWARE/ MODE/ CHANNELS/ FREQUENCY BAND
	ONLY ON CERTAIN STANDARDS
	ONLY ON ONE CHANNEL
	ONLY WITH CERTAIN INPUT(S)
	ONLY ON CERTAIN OUTPUT(S)
	IN STANDBY/OFF MODE
	AT EDIT POINT
	WHEN INTERCON-NECTED
	LIQUID CONTAMINATION
	FOR A SHORT WHILE AFTER SWITCH-ON
	AFTER MAKING A COPY
	UNDER STRESSED CONDITIONS / HIGH LOAD
	AT SWITCH-OFF

(*1)

AUTION

HE 'X' EXTENDED YMPTOM CODES *-**X) SHOULD NLY BE USED TO NDICATE THAT A UITABLE YMPTOM ESCRIPTION IS OT AVAILABLE N THE ONCERNED YMPTOM GROUP

		1	NO ACTION	2	LEVEL	3	QUALITY	4	NOISE
1	GENERAL	110	**POWER PROBLEM OR NOT OPERATING**	120	**CHARGING PROBLEM**	130	**DISPLAY FUNCTION PROBLEM**	140	**ABNORMAL NOISE**
		111	NO POWER	121	NO BATTERY CHARGING	131	FAULTY DISPLAY	141	CRT DISCHARGING NOISE
		112	NO POWER WHEN USING AC-ADAPTER	122	INCOMPLETE BATTERY CHARGE	132	FAULTY LAMP/LED OPERATION	142	EHT DISCHARGING NOISE
		113	NO POWER WHEN USING DRY BATTERIES	123	CHARGING TIME TOO LONG	133	FAULTY LEVEL METER OPERATION	143	NOISY CABINET/CRACKING TRAYS
		114	NO POWER WHEN USING RECHARGEABLE BATTERIES	12X	OTHER 'CHARGING' PROBLEM	134	FAULTY ON-SCREEN DISPLAY OPERATION	144	NOISY TRANSFORMER/HUMMING
		115	NO POWER FROM SOLAR CELL			135	ELECTRONIC TUNING DISPLAY FAULT	145	NOISY COMPONENT(S)
		116	NO POWER WHEN USING A CAR BATTERY			136	MECHANICAL TUNING DISPLAY FAULT	146	RATTLE
		117	SHORT OPERATION TIME/SHORT BATTERY LIFE			137	FAULTY TIME CODE DISPLAY	147	CLICKING
		118	POWER-OFF FUNCTION NOT WORKING			138	FAULTY ALARM/ERROR DISPLAY	148	CLOCK NOISE
		119	NO SWITCH-ON FROM STANDBY			139	DISPLAY DIM/TOO DARK	149	CRACKING
		11A	POWERS UP, BUT NO OPERATION			13A	UNUSUAL OR INCORRECT MESSAGE IN DISPLAY	14A	WHISTLING
		11B	CYCLIC POWER ON/OFF			13B	NO BACKLIGHT	14X	OTHER 'ABNORMAL' NOISE
		11C	BLOWING EXTERNAL (MAINS) FUSE			13C	BEEPS, NO DISPLAY		
		11D	SET SWITCHES OFF BY ITSELF			13D	WARNING LIGHT DOES NOT WORK		
		11E	BACKUP BATTERY PROBLEM			13E	WARNING LIGHT LIGHTS UP		
		11F	NOT OPERATING			13X	OTHER 'DISPLAY FUNCTION' PROBLEM		
		11G	NO AUTOMATIC SWITCH ON/OFF						
		11H	PROTECTION SWITCH/FUSE IN SET TRIGGERS						
		11J	RECHARGEABLE BATTERY NOT RECOGNIZED						
		11X	OTHER 'POWER' PROBLEM						
2	COMMUNICATION	210	**NO RECEPTION OR CONNECTION**	220	**POOR RECEPTION OR CONNECTION**	230	**TRANSMISSION/CONNECTION PROBLEM**	240	**NOISY RECEPTION/TRANSMISSION**
		211	NO AM RECEPTION	221	POOR AM RECEPTION	231	NO TRANSMISSION/CONNECTION	241	LINE NOISE
		212	NO FM RECEPTION	222	POOR FM RECEPTION	232	POOR TRANSMISSION/CONNECTION	242	OSCILLATION
		213	NO SW RECEPTION	223	POOR SW RECEPTION	233	TRANSMISSION LEVEL TOO HIGH	243	INTERSTATION INTERFERENCE
		214	NO VHF RECEPTION	224	POOR VHF RECEPTION	234	NO TRANSMISSION BETWEEN BASE UNIT AND HANDSET	24X	OTHER 'NOISY RECEPTION/TRANSMISSION' PROBLEM
		215	NO UHF RECEPTION	225	POOR UHF RECEPTION	235	POOR TRANSMISSION BETWEEN BASE UNIT AND HANDSET		
		216	NO BS RECEPTION	226	POOR BS RECEPTION	236	NO IR TRANSMISSION		
		217	NO CS RECEPTION	227	POOR CS RECEPTION	237	ONE-SIDED CONNECTION		
		218	NO HDTV RECEPTION	228	POOR HDTV RECEPTION	238	MODEM HANGS UP IMMEDIATELY ONCE CONNECTED		
		219	NO GPS/QPS RECEPTION	229	POOR GPS/QPS RECEPTION	239	MODEM DROPS LINE DURING CONNECTION		
		21A	NO RECEPTION OF DIGITAL BROADCASTING	22A	POOR RECEPTION OF DIGITAL BROADCASTING	23X	OTHER 'TRANSMISSION/CONNECTION' PROBLEM		
		21B	NO IR RECEPTION	22B	POOR IR RECEPTION				
		21C	NO DIAL TONE	22X	OTHER 'POOR RECEPTION' PROBLEM				
		21D	NO MODEM/FAX CONNECTION						
		21E	MODEM NOT ANSWERING/NO CARRIER						
		21F	NO NETWORK CONNECTION/NETWORK INITIALIZATION FAILS						
		21X	OTHER 'NO RECEPTION' PROBLEM						
3	PICTURE	310	**NO PICTURE**	320	**PICTURE LEVEL PROBLEM**	330	**PICTURE QUALITY PROBLEM**	340	**PICTURE NOISE**
		311	NO PICTURE IN E TO E MODE	321	PICTURE TOO DARK	331	POOR PICTURE RESOLUTION	341	SNOWY PICTURE
		312	NO PICTURE IN PLAYBACK MODE	322	PICTURE TOO BRIGHT	332	POOR FOCUS	342	DOT NOISE OR DROPOUT ON PICTURE
		313	NO PICTURE IN VIEWFINDER	323	CONTRAST TOO LOW	333	RINGING ON PICTURE	343	NOISE BARS ON PICTURE
		314	NO PICTURE, ONLY RASTER	324	CONTRAST TOO HIGH	334	EXCESSIVE SMEAR/LAG	344	BLANKING LINES ON PICTURE
		315	NO RASTER, BLACK PICTURE	325	SATURATED WHITE OR BLACK LEVEL	335	POOR LINEARITY OR GEOMETRY	345	BEATING ON PICTURE
		316	ONLY HORIZONTAL LINE	326	SHADING ON PICTURE	336	PICTURE SIZE INCORRECT	346	GHOSTING ON PICTURE
		317	ONLY VERTICAL LINE	327	ONLY PARTIAL PICTURE	337	INCORRECT CENTRING OF PICTURE	347	VCR HEAD SWITCHING NOISE ON PICTURE
		318	NO PICTURE IN LCD	32X	OTHER 'PICTURE LEVEL' PROBLEM	338	PICTURE SLANTED	348	OVERMODULATION NOISE
		319	NO 2nd (OR HIGHGER) MONITOR DISPLAY			339	V-SIZE INCORRECT	349	MOIRÉ
		31X	OTHER 'NO PICTURE' PROBLEM			33A	H-SIZE INCORRECT	34A	MOSAIC NOISE
						33X	OTHER 'PICTURE QUALITY' PROBLEM	34B	SCRAMBLED PICTURE
								34X	OTHER 'PICTURE NOISE' PROBLEM
4	COLOUR	410	**NO COLOUR**	420	**COLOUR LEVEL PROBLEM**	430	**POOR COLOUR QUALITY**	440	**NOISY COLOUR**
		411	NO COLOUR IN E TO E MODE	421	WEAK COLOUR	431	SOME OR ALL COLOURS MISSING	441	COLOUR NOISE ON A BLACK & WHITE PICTURE
		412	NO COLOUR IN PLAYBACK MODE	422	EXCESSIVE COLOUR	432	POOR WHITE BALANCE		
		413	NO COLOUR IN VIEWFINDER	42X	OTHER 'COLOUR LEVEL' PROBLEM	433	HUE PROBLEM	442	COLOUR STREAKING
		414	NO COLOUR IN PART OF PICTURE			434	PURITY ERROR	443	COLOUR BARS ON PICTURE
		41X	OTHER 'NO COLOUR' PROBLEM			435	LANDING ERROR/WHITE UNIFORMITY	44X	OTHER 'COLOUR NOISE' PROBLEM
						436	CONVERGENCE ERROR		
						437	REGISTRATION ERROR		
						438	PITCH MOIRÉ/RAINBOW PATTERN		
						439	COLOUR SHIFT		
						43X	OTHER 'COLOUR QUALITY' PROBLEM		
5	AUDIO	510	**NO AUDIO**	520	**AUDIO LEVEL PROBLEM**	530	**AUDIO QUALITY**	540	**NOISY AUDIO**
		511	NO SOUND IN E TO E MODE	521	LOW AUDIO LEVEL	531	POOR FREQUENCY RESPONSE	541	HUM
		512	NO PLAYBACK OF OUTGOING MESSAGE(S)	522	EXCESSIVE AUDIO LEVEL	532	DISTORTED AUDIO	542	HISS
		513	NO PLAYBACK OF INCOMING MESSAGE(S)	523	BALANCE PROBLEM	533	NO OR POOR TREBLE	543	CROSSTALK
		514	NO AUDIO PLAYBACK	524	FADER PROBLEM	534	NO OR POOR BASS	544	STATIC, POP OR CLICK NOISE
		515	NO SOUND FROM HANDSET	525	AUDIO LEVEL REMAINING/NO MUTING	535	EARPHONE/HEADPHONE AUDIO POOR	545	BUZZ
		516	NO SOUND FROM SPEAKER	52X	OTHER 'AUDIO LEVEL' PROBLEM	53X	OTHER 'AUDIO QUALITY' PROBLEM	546	SCRATCHING NOISE
		517	NO SOUND FROM EARPHONE/HEADPHONE					547	IGNITION NOISE
		518	NO MICROPHONE SOUND					548	WHISTLING/MULTIPATH NOISE
		519	NO SOUND FROM DIGITAL OUTPUT					549	DATA/DIGITAL NOISE
		51X	OTHER 'NO AUDIO' PROBLEM					54X	OTHER 'AUDIO NOISE' PROBLEM
6	MECHANISM	610	**NO MECHANICAL OPERATION**	620	**IRREGULAR MECHANICAL OPERATION**	630	**SPEED PROBLEM**	640	**MECHANICAL NOISE**
		611	NO ROTATION OF MOTOR/DISC	621	IRREGULAR ROTATION	631	SPEED TOO FAST	641	ROTATION NOISE/DRUM NOISE
		612	NO FORWARD OPERATION	622	IRREGULAR FORWARD MODE	632	SPEED TOO SLOW	642	MOTOR NOISE
		613	NO REVERSE OPERATION	623	IRREGULAR REVERSE OPERATION	633	SPEED UNADJUSTABLE	643	WIND/AIR NOISE
		614	NO FAST FORWARD OR REWIND FUNCTION	624	IRREGULAR FAST FORWARD OR REWIND FUNCTION	63X	OTHER 'SPEED' PROBLEM	644	SQUEALING
		615	NO LOADING	625	IRREGULAR LOADING OF MEDIA			645	FAN NOISE
		616	NO UNLOADING OR EJECTING	626	IRREGULAR UNLOADING OR EJECTING			646	DISC SCRAPING
		617	NO AUTO SHUT-OFF OPERATION	627	IRREGULAR AUTO SHUT-OFF OPERATION			647	NOISY TAPE LOADING
		618	TONEARM DOES NOT MOVE	628	IRREGULAR TONEARM MOVEMENT			648	GEAR NOISE
		619	DISC NOT BEING EJECTED	629	IRREGULAR EJECTION OF DISC			649	CONTROL OR SWITCH NOISY
		61A	MAGAZINE OR MODULE LOADING/UNLOADING	62A	IRREGULAR DIRECTION CHANGE			64A	GRINDING
		61B	CONTROL/SWITCH NOT WORKING	62B	FAULTY DISC CHANGE OPERATION			64B	RUMBLING
		61X	OTHER 'NO MECHANICAL OPERATION' PROBLEM	62X	OTHER 'IRREGULAR MECHANICAL OPERATION' PROBLEM			64C	VIBRATION NOISE
								64X	OTHER 'MECHANICAL NOISE' PROBLEM
7	DATA PROCESSING	710	**NO DATA PROCESSING OPERATION**	720	**FAULTY DATA PROCESSING OPERATION**	730	**DATA DISPLAY PROBLEM**	740	**KEYBOARD/POINTING DEVICE**
		711	NO INITIAL SCREEN	721	INCORRECT DATA	731	INCORRECT CHARACTER DISPLAY	741	MOUSE/TRACKBALL/TRACKPAD NOT WORKING
		712	SYSTEM DOES NOT RESET	722	SYSTEM RESET WHILE BEING USED	732	MISSING DISPLAY CHARACTERS	742	KEYBOARD LOCKS UP
		713	SYSTEM DOES NOT BOOT UP	723	SYSTEM LOCKS OUT/CRASHES/HANGS	733	FAULTY GRAPHIC DISPLAY	743	POINTING DEVICE LOCKS UP
		714	NO OPERATION FROM PLUG-IN MODULE/PERIPHERAL	724	FAULTY OPERATION OF PLUG-IN MODULE	734	FAULTY SWITCHING BETWEEN GRAPHIC/ CHARACTER MODE	744	STICKY KEY(S)
		715	NO KEYBOARD OPERATION	725	FAULTY KEYBOARD OPERATICN	735	FAULTY PROMPT/CURSOR OPERATION	745	INOPERATIVE KEY(S)
		716	NO OPERATION FROM OTHER INPUT/OUTPUT DEVICE	726	FAULTY OPERATION OF OTHER INPUT/OUTPUT DEVICE	736	DATA DISPLAY COLOUR INCORRECT	746	POINTING DEVICE NOT TRACKING PROPERLY
		717	NO DATA STORAGE OPERATION	727	FAULTY DATA STORAGE OPERATION	737	NO PAGING OR SCROLL MODE	747	POINTING DEVICE JITTERY
		718	NO DATA COMMUNICATION	728	FAULTY DATA COMMUNICATION	73X	OTHER 'DATA DISPLAY' PROBLEM	748	LEFT- OR RIGHT CLICK BUTTON INOPERATIONAL
		719	ERROR MESSAGE DISPLAY	729	MEMORY ERROR			749	TRACKPAD SURFACE DAMAGED
		71A	HDD BOOT FAILURE	72A	REQUIRES 'SET UP' AT BOOTING			74A	KEYBOARD KEY(S) DAMAGED
		71B	FDD BOOT FAILURE	72X	OTHER 'FAULTY DATA PROCESSING' PROBLEM			74X	OTHER KEYBOARD/POINTING DEVICE PROBLEM
		71X	OTHER 'NO DATA PROCESSING' PROBLEM						
8	PRINT/COPY/SCAN	810	**NO PRINT/COPY/SCAN OPERATION**	820	**ERRONEOUS PRINT/COPY/SCAN OPERATION**	830	**POOR PRINT QUALITY**	840	**NOISY PRINTING**
		811	NOT PRINTING	821	PRINT IMAGE REVERSED (NEGATIVE/POSITIVE)	831	INCORRECT PRINTING POSITION	841	PRINTING NOISE LINES
		812	NO COMMUNICATION WITH PRINTER	822	IRREGULAR PAPER FEED	832	LOW PRINT CONTRAST	842	DIRTY PRINTING
		813	PAPER NOT LOADING	823	ERRONEOUS PRINT MODE SWITCHING	833	EXCESSIVE PRINT CONTRAST	843	UNPLEASANT SMELL (OZONE)
		814	NO PAPER FEED	824	COPY TOO DARK	834	BLURRED PRINT IMAGE	844	BLACK LINES/STRIPES IN FEED DIRECTION
		815	NO IMAGE FIXATION	825	COPY TOO BRIGHT	835	PRINT IMAGE NOT SHARP	845	WHITE LINES/STRIPES IN FEED DIRECTION
		816	NO DOCUMENT FEEDING	826	BLACK COPY	836	DOTS MISSING IN PRINT IMAGE	846	BLACK LINES/STRIPES ACROSS FEED DIRECTION
		817	SCANNER NOT WORKING	827	WHITE COPY	837	COLOUR STREAKING		
		81X	OTHER 'NO PRINT/COPY/SCAN OPERATION' PROBLEM	828	POOR COLOUR LEVELS	838	NO COLOUR IN PART OF PICTURE	847	WHITE LINES/STRIPES ACROSS FEED DIRECTION
				829	IRREGULAR DOCUMENT FEED	839	PRINT IMAGE/COPY INCOMPLETE		
				82A	FAULTY CORRECTION FUNCTION	83A	FAULTY CALIBRATION	84X	OTHER 'NOISY PRINTING' PROBLEM
				82B	POOR SCANNING QUALITY	83X	OTHER 'PRINT QUALITY' PROBLEM		
				82X	OTHER 'PRINT/COPY/SCAN OPERATION' PROBLEM				

SYMPTOM CODE TABLE

5	UNSTABLE	6	RECORDING & PHYSICAL PROBLEMS	7	SPECIAL FUNCTIONS	8	OTHER CONDITIONS
150	**REMOTE CONTROL PROBLEM**	**160**	**PHYSICAL DAMAGE**	**170**	**GENERAL FUNCTION PROBLEM**	**180**	**SPECIAL REQUIREMENTS**
151	NO REMOTE CONTROL OPERATION	161	DAMAGED/DEFORMED CABINET/PANEL	171	FAULTY CLOCK FUNCTION	181	TEST AND CHECK
152	INCORRECT REMOTE CONTROL OPERATION	162	DAMAGED HANDLE/CLIP	172	FAULTY SLEEP FUNCTION	182	GENERAL OVERHAUL
153	REMOTE CONTROL PROGRAMMING/ LEARNING MODE PROBLEM	163	DAMAGED CONTROL KNOB(S)/BUTTON(S)/KEYPAD	173	FAULTY TIMER PROGRAMMING	183	SYSTEM/FREQUENCY CONVERSION
154	POOR REMOTE CONTROL SENSITIVITY	164	DAMAGED DOOR/COVER	174	FAULTY TIMER OPERATION	184	INITIAL SETUP/INSTALLATION REQUES
15X	OTHER 'REMOTE CONTROL' PROBLEM	165	DAMAGED SEAL	175	PROGRAMMING/USER ADJUSTMENT PROBLEM	185	MODIFICATION/CIRCUIT/INSTALLATIO CHANGE
		166	DAMAGED PLUG/SOCKET/TERMINAL/CONNECTOR	176	FAULTY RECORD MUTE OPERATION	186	WRONG PRODUCT IN CARTON
		167	DAMAGED LENS	177	FAULTY PROGRAMMED PLAYBACK OPERATION	187	ACCESSORY MISSING
		168	DAMAGED CARTRIDGE OR STYLUS	178	FAULTY MEMORY FUNCTION	188	UNABLE TO CONNECT PARTS/-TO ASSEMBLE
		169	DAMAGED ANTENNA	179	FAULTY INPUT SWITCHING	189	WRONG COLOUR
		16A	DAMAGED CRT OR VIEWFINDER/LCD DISPLAY	17A	FAULTY OUTPUT SWITCHING	18B	BATTERY MOUNTING PROBLEM
		16B	MISSING COMPONENT(S) OR ORNAMENTAL PARTS	17B	ELECTRIC SHOCK/STATIC DISCHARGE	18X	OTHER SPECIAL REQUIREMENTS
		16C	PRINTED MARKINGS ERASED/PEELED OFF	17C	FAULTY SEARCH FUNCTION (INDEX/VIEW/TITLE/CHAPTER/TRACK...)	18Z	SYMPTOM NOT AVAILABLE
		16D	SET BURNING/EMITS SMOKE	17D	WRONG LANGUAGE/CHARACTER SET		
		16E	EXTERNAL SURFACE DAMAGE (BUBBLING/PEELING/RUSTING/SCRATCHED)	17E	ERROR CODE APPEARS IN DISPLAY		
		16F	SMELL	17F	SWITCH NOT OPERATING		
		16G	WEAK/DAMAGED STAND	17G	PEDAL NOT OPERATING		
		16H	DAMAGED SPEAKER	17H	FAULTY STANDBY MODE		
		16J	SET GETS VERY HOT / PARTS MELTING	17J	FAULTY HIBERNATION MODE		
		16K	FOREIGN SUBSTANCE ON/IN UNIT	17K	NO AUDIBLE WARNING SIGNAL		
		16L	BURNING MARKS	17L	FAULTY OPERATION OF PARENTAL LOCK/KEYLOCK FUNCTION		
		16M	INTERNAL SURFACE DAMAGE (BUBBLING/PEELING/RUSTING/SCRATCHED)	17M	FAULTY MODE SWITCHING		
		16N	DAMAGED POWER CABLE	17N	MENU FUNCTION PROBLEM		
		16P	DAMAGED ACCESSORY	17X	OTHER 'GENERAL FUNCTION' PROBLEM		
		16R	DISCOLOURATION				
		16X	OTHER PHYSICAL DAMAGE				
250	**UNSTABLE RECEPTION/TRANSMISSION**	**260**	**TUNING PROBLEM**	**270**	**SPECIAL COMMUNICATION PROBLEM**	**280**	**SPECIAL RECEPTION PROBLEM**
251	TUNING DRIFT	261	MANUAL TUNING PROBLEM	271	FAULTY DIALLING	281	FAULTY STEREO RECEPTION
252	FADING	262	AUTOMATIC TUNING PROBLEM	272	FAULTY CHANNEL SELECTION	282	FAULTY MAIN CHANNEL (A) FUNCTION
253	INTERMITTENT LINE/LINE BREAKING OFF	263	INCORRECT TUNING	273	FAULTY AUTO-ANSWER OPERATION	283	FAULTY SUB-CHANNEL (B) FUNCTION
254	NO OR UNSTABLE CONNECTION COMBINED WITH 'WEAK SIGNAL STRENGTH' INDICATION	264	TUNING MEMORY PROBLEM	274	FAULTY MESSAGE READ-OUT FUNCTION	284	FAULTY SSB RECEPTION
		26X	OTHER 'TUNING' PROBLEM	275	FAULTY AUTODIAL/REDIAL MEMORY	285	FAULTY RDS/VPS/PDC/XDS OPERATIO
25X	OTHER 'UNSTABLE RECEPTION/ TRANSMISSION' PROBLEM			276	FAULTY SPEECH PROCESSING	286	FAULTY TELETEXT/CLOSE CAPTION/EP RECEPTION
				277	NO RINGING TONE	287	FAULTY SATELLITE/RTTY RECEPTION
				278	LOUD/WEAK RINGING TONE	288	FAULTY FAX OPERATION
				279	MODEM STUCK OFF HOOK	289	MODEM NOT RECOGNIZED BY SYSTEM
				27A	FAX DOES NOT WORK PROPERLY	28A	FAULTY CALL CHARGE DISPLAY
				27B	MODEM CAUSES PROBLEM WITH PHONE	28B	FAULTY HANDS-FREE OPERATION
				27C	NO MODEM DIAL TONE	28C	SET LOCKED
				27X	OTHER 'SPECIAL COMMUNICATION' PROBLEM	28X	OTHER 'SPECIAL RECEPTION' PROBLE
350	**UNSTABLE PICTURE**	**360**	**POOR PICTURE RECORDING**	**370**	**SPECIAL PICTURE FUNCTION PROBLEM**	**380**	**PICTURE DISPLAY/PICKUP PROBLE**
351	SYNC PROBLEM	361	NO PICTURE RECORDING	371	EDITING PROBLEM	381	BURN MARK ON DISPLAY/PICKUP
352	PICTURE PUMPING	362	NO ERASURE PROTECTION FOR VIDEO	372	FAULTY FADING/WIPER OPERATION	382	SCRATCH ON DISPLAY/PICKUP
353	PICTURE JITTER	363	PREVIOUS VIDEO RECORDING NOT BEING ERASED	373	FAULTY NEGATIVE/POSITIVE SWITCHING FUNCTION	383	DUST/DIRT ON DISPLAY/PICKUP
354	PICTURE SHAKING (HORIZONTAL OR VERTICAL)	364	UNWANTED ERASURE OF PICTURE	374	FAULTY SUPERIMPOSE/TELOP OPERATION	384	PHOSPHOR/PIXEL MISSING ON DISPLAY/PICKUP
355	FLICKERING PICTURE	365	NO CAMERA RECORDING	375	FAULTY PICTURE IN PICTURE/DIGITAL PICTURE OPERATION	385	BRIGHT POINT(S) IN PHOSPHOR/PIXE
356	FLASHING PICTURE	366	ONLY ONE FIELD PER FRAME BEING RECORDED	376	FAULTY PICTURE TRANSMISSION	386	LINES ACROSS/DOWN IMAGE
357	CYCLIC PICTURE MUTING	367	RECORDS ONLY A FEW PICTURES	377	FAULTY DIGITAL SHUTTER FUNCTION	387	OUT OF SPECS PIXEL DEFAULTS
358	HEAD IMPACT ERROR CAUSING UNSTABLE PICTURE	36X	OTHER 'PICTURE RECORDING' PROBLEM	378	FAULTY GENLOCK FUNCTION	388	BACKGROUND BURNT IN
359	VCR SKEW/H-SHIFT ERROR			379	FAULTY FLASH/STROBE FUNCTION	38X	OTHER 'PICTURE DISPLAY/PICKUP' PROBLEM
35A	FROZEN PICTURE			37A	FAULTY DIGITAL PICTURE/ZOOMING FUNCTION		
35B	JUMPING/REPEATING PICTURE			37B	FAULTY AUTO-EDIT FUNCTION		
35X	OTHER 'UNSTABLE PICTURE' PROBLEM			37C	FAULTY PICTURE STABILIZER FUNCTION		
				37D	FAULTY PICTURE CAPTURE FUNCTION		
				37E	FAULTY SUBTITLING FUNCTION		
				37F	FAULTY VARIABLE SPEED PLAYBACK		
				37G	FAULTY VIEW-/MULTI-ANGLE SWITCHING		
				37H	FAULTY ASPECT RATIO SWITCHING		
				37J	THUMBNAIL- OR INDEX PICTURE PROBLEM		
				37K	NO BLANKING SCREEN		
				37X	OTHER 'SPECIAL PICTURE FUNCTION' PROBLEM		
450	**UNSTABLE COLOUR**	**460**	**POOR COLOUR RECORDING**	**470**	**SPECIAL COLOUR FUNCTION PROBLEM**	**480**	
451	COLOUR FLASHING	461	NO COLOUR RECORDING	471	FAULTY AUTOMATIC WHITE BALANCE		
452	HUE CONSTANTLY CHANGING	462	NOISY COLOUR RECORDING	472	FAULTY COLOUR EFFECTS FUNCTION		
453	FLICKERING COLOUR	46X	OTHER 'COLOUR RECORDING' PROBLEM	47X	OTHER 'SPECIAL COLOUR FUNCTION" PROBLEM		
454	COLOUR NOT LOCKED						
45X	OTHER 'UNSTABLE COLOUR' PROBLEM						
550	**UNSTABLE AUDIO**	**560**	**POOR AUDIO RECORDING**	**570**	**POOR SPECIAL AUDIO FUNCTION**	**580**	**STEREO/MULTI MODE OPERATION PROBLEM**
551	JUMPING OR REPEATING AUDIO	561	AUDIO NOT BEING RECORDED	571	FAULTY FADE OPERATION	581	NO STEREO OPERATION
552	AUDIO PUMPING OR BREATHING	562	NO ERASURE PROTECTION FOR AUDIO	572	FAULTY ECHO OPERATION	582	POOR CHANNEL SEPARATION
553	AUDIO DROPOUTS	563	PREVIOUS AUDIO RECORDING NOT BEING ERASED	573	FAULTY MIXING OPERATION	583	DIFFERENCE IN PHASE BETWEEN CHANNELS
554	CYCLIC AUDIO MUTING	564	UNWANTED ERASURE OF AUDIO	574	FAULTY REPEAT MODE OPERATION	584	PROBLEM WITH SURROUND SOUND M
555	WOW AND FLUTTER	565	MESSAGE NOT BEING RECORDED	575	FAULTY AUDIO PROCESSING	585	PROBLEM WITH PCM AUDIO MODE
556	HOWLING/ACOUSTIC FEEDBACK	566	DISTORTED AUDIO RECORDING	576	FAULTY SYNC RECORDING OPERATION	58X	OTHER 'STEREO/MULTI MODE' PROBL
557	ECHO IN SOUND	56X	OTHER 'AUDIO RECORDING' PROBLEM	577	FAULTY DBB/DOL OPERATION		
55X	OTHER 'UNSTABLE AUDIO' PROBLEM			578	FAULTY NOISE REDUCTION OPERATION		
				579	FAULTY AUDIO DUB FUNCTION		
				57A	FAULTY TITLE PROGRAMMING		
				57B	FAULTY MIC CONTROL		
				57C	FAULTY PITCH CONTROL		
				57X	OTHER 'SPECIAL AUDIO FUNCTION' PROBLEM		
650	**MECHANICAL INSTABILITY**	**660**	**DAMAGE TO MEDIA**	**670**	**MECHANICAL OPERATION PROBLEM**	**680**	**LENS PROBLEM**
651	UNEVEN FEET	661	TAPE GETS SCRATCHED	671	FAULTY START/STOP OPERATION	681	FOCUS PROBLEM
652	FAULTY HINGE	662	DISC GETS SCRATCHED	672	FAULTY PAUSE OPERATION	682	ZOOM PROBLEM
653	VIBRATING/JUMPING	663	TAPE GETS CHEWED/WRINKLED	673	FAULTY AUTOMATIC PROGRAM SEARCH	683	IRIS PROBLEM
654	PARTS LOOSE	664	TAPE JAMMED OR BROKEN	674	FAULTY CUE/REVIEW MODE	684	MACRO PROBLEM
655	DAMAGED WHEEL(S)	665	TAPE GETS CURLED	675	FAULTY SLOW MOTION OPERATION	68X	OTHER 'LENS' PROBLEM
65X	OTHER 'MECHANICAL INSTABILITY' PROBLEM	666	SLACK TAPE	676	FAULTY HIGH-SPEED SCANNING MODE		
		667	TAPE STICKING	677	FAULTY SPEED COPY FUNCTION		
		66X	OTHER 'SOFTWARE DAMAGE' PROBLEM	678	FAULTY REPEAT OPERATION		
				679	FAULTY RECORD REVIEW MODE		
				67A	FAULTY AMS OPERATION		
				67B	AUTO-REVERSE MALFUNCTION		
				67C	FAULTY END DETECTION		
				67D	FAULTY DISC SIDE (A-B SELECT) SWITCHING		
				67X	OTHER 'MECHANICAL OPERATION' PROBLEM		
750	**PERIPHERAL PROBLEM (NON-STORAGE)**	**760**	**DATA STORAGE PROBLEM**	**770**	**SPECIAL DATA PROCESSING FUNCTION PROBLEM**	**780**	**INTERFACE PROBLEM**
751	PERIPHERAL DOES NOT INITIALISE	761	FORMATTING PROBLEM	771	FAULTY SELF-DIAGNOSTIC MODE	781	USB INTERFACE PROBLEM
752	COMMUNICATION FAILURE WITH PERIPHERAL	762	DATA ON STORAGE MEDIUM BEING LOST	772	FAULTY WORD PROCESSING FUNCTION	782	PARALLEL INTERFACE PROBLEM
753	INTERNAL PERIPHERALS FAILURE	763	FRAME MEMORY PROBLEM	773	FAULTY GRAPHIC EDIT FUNCTION	783	SCSI INTERFACE PROBLEM
754	EXTERNAL PERIPHERALS FAILURE	764	READ/WRITE ERRORS	774	PROGRAM CANNOT BE INSTALLED	784	SERIAL INTERFACE PROBLEM
755	NETWORK CARD ERROR	765	HARD- OR OPTICAL DRIVE PROBLEM	775	PRE-LOADED PROGRAM CANNOT BE STARTED UP	785	INCOMPATIBLE WITH OTHER SYSTEMS
756	PERIPHERAL FAILS SELF TEST	766	FLOPPY DRIVE PROBLEM	776	NOT PRE-LOADED PROGRAM CANNOT BE STARTED UP	786	AUDIO/VIDEO INTERFACE PROBLEM
75X	OTHER PERIPHERAL PROBLEM	767	CD/DVD-ROM DRIVE PROBLEM	777	VIRUS ALARM	787	i.LINK/FIREWIRE/IEEE1394 INTERFACE PROBLEM
		768	TAPE PROBLEM	77X	OTHER 'SPECIAL DATA FUNCTION' PROBLEM	78X	OTHER 'INTERFACE' PROBLEM
		769	DRIVE WILL NOT MOUNT/CANNOT ACCESS DRIVE				
		76A	DISCS EXCHANGE PROBLEM				
		76B	READ/WRITE OPERATION VERY SLOW				
		76X	OTHER 'DATA READ/WRITE' PROBLEM				
850	**UNSTABLE PRINTER OPERATION**	**860**	**RIBBON/PAPER PROBLEMS**	**870**		**880**	**FAULTY FONT/CHARACTER FUNCTI**
851	UNSTABLE PAPER LOADING	861	RIBBON BROKEN			881	INCORRECT CHARACTERS OR IMAGE
852	UNSTABLE MULTI-PAPER LOADING	862	RIBBON STUCK/STICKING			882	INCORRECT CHARACTER SIZE
853	INCORRECT LINE-UP OF CHARACTERS	863	RIBBON DERAILED			883	FONT LOADING PROBLEM
85X	OTHER 'UNSTABLE PRINTER OPERATION' PROBLEM	864	PAPER STUCK/STICKING TO MECHANISM			88X	OTHER 'FAULTY FONT/CHARACTER FUNCTION' PROBLEM
		865	PAPER JAM				
		866	DOCUMENT JAM				
		867	ERRONEOUS 'NO INKT/TONER' MESSAGE				
		86X	OTHER 'RIBBON/PAPER' PROBLEM				

EACEM - SECTION CODES

COMMON	
ANT	ANTENNA SECTION
APR	SIGNAL PROCESSING (ANALOG)
BCH	BATTERY CHARGE
CLK	CLOCK/TIMER SECTION
CPA	COLOUR PROCESSING/ANALOG
CTR	CONTROL PANEL
DPR	SIGNAL PROCESSING (DIGITAL)
ERA	ERASE CIRCUIT
FLX	FLEXIBLE PRINTED CIRCUIT BOARD
HFS	HIGH FREQUENCY SECTION (RF)
IDS	INFORMATION DISPLAY SECTION
IFC	IF-CIRCUIT
ILN	i.LINK (IEEE1394) SECTION
INP	SIGNAL INPUT SECTION
IRD	INFRARED (IrDA) SECTION
MEM	MEMORY CIRCUIT
OUT	SIGNAL OUTPUT SECTION
PRG	PROGRAMMING SECTION
PRT	PROTECTION CIRCUIT
PSU	POWER SUPPLY
PWA	POWER AMP SECTION
REM	REMOTE CONTROL SECTION
RFU	BOOSTER,RF UNIT
SFT	SOFTWARE (TAPE, DISC, ETC.)
SNS	SENSOR UNIT
SVO	SERVO SECTION
SYS	SYSTEM CONTROL SECTION
TUN	TUNING SECTION
TXT	TEXT PROCESSING

SOUND-RELATED	
APA	AUDIO PROCESSING/ANALOG
APD	AUDIO PROCESSING/DIGITAL
CDC	CD CHANGER SECTION
CDS	CD SECTION
MDC	MD CHANGER SECTION
MDS	MINIDISC SECTION
MIC	MICROPHONE SECTION
PUD	PICK-UP DEVICE
SHD	STATIONARY HEAD(S)
SPK	SPEAKER

PICTURE-RELATED	
CAM	CAMERA CIRCUIT
CPD	COLOUR PROCESSING/DIGITAL
CRT	PICTURE TUBE
DFL	DEFLECTION CIRCUIT
DVD	DVD SECTION
FPK	FOCUS PACK
IMG	IMAGE DISPLAY UNIT

PICTURE-RELATED	
LCD	LCD SECTION
LMP	LAMP/FLASH SECTION
VPA	VIDEO PROCESSING/ANALOG
VPD	VIDEO PROCESSING/DIGITAL
VWF	VIEWFINDER

PC-RELATED	
FDD	FLOPPY DISC DRIVE
FMW	FIRMWARE
HDD	HARD DISC DRIVE
ISA	ISA SECTION
JST	JOYSTICK
KBD	KEYBOARD (SEPARATE)
MDM	MODEM SECTION
NIF	NETWORK INTERFACE
PAR	PARALLEL PORT
PCC	PC CARD
PCI	PCI SECTION
SCS	SCSI PORT
SER	SERIAL PORT
USB	USB PORT

MECHANICAL	
ARM	ARM MECHANISM
BZL	BEZEL
CBT	CABINET
CHA	CHASSIS
DDM	DISC DRIVE MECHANISM
EXC	EXTERNAL CONNECTOR
HCM	HEAD CARRIAGE MECHANISM
HOL	CASSETTE HOLDER
INC	INTERNAL CONNECTOR
LDG	LOADING MECHANISM
LNM	LENS MECHANISM
PFM	PAPER FEED MECHANISM
PIN	PINCH ROLLER/LEVER
PRI	PRINT BLOCK
RFM	RIBBON FEED MECHANISM
RHD	ROTARY HEAD(S)
SLD	SLED MECHANISM
SRS	SUPPLY REEL SECTION
STA	STATIC BLOCK
TDM	TAPE DRIVE MECHANISM
THR	THREADING MECHANISM
TNR	TENSION REGULATOR
TPT	TAPE PATH
TRS	TAKE-UP REEL SECTION
WIR	LEAD WIRE
XXX	CABINET/COSMETIC PARTS

EXAMPLE OF USE:

FLAG	SYMPTOM CODE	PART NO.	REF. NO.	SECTION	PCB	DEFECT CODE	REPAIR CODE	QTY
1	1 4 1 2 3 6 4 1	1 1 1 1 1 1 1 1 1 1 1 1 1 1 1 1 3 4 5 6 7 8 9 X X X X X X X X X	R 1 2 3 . . . . 1 1 1	T D M	Y A 2 2 . . .	C 1	Z 1	. . . .

FLAG: INDICATES THE ONE MAJOR SYMPTOM/PART COMBINATION BY '1'

DEFECT CODES

MECHANICAL	
A	WORN OUT (OR GENERAL MECHANICAL DEFECT)
A1	MISOPERATING
B	DIRTY, CLOGGED
C	MECHANICALLY MISALIGNED
D	CUT, BROKEN
E	DEFORMED
F	SNAPPED
G	SCRATCHED, DENTED, SHARP EDGES
H	CRACKED, PEELED, CORRODED, MELTED
I	LOOSE/OFF/STRIPPED
J	SHAKY, UNSTABLE
K	LEAKING (MECHANICAL)
L	DRY (NO LUBRICANT)
M	FOREIGN OBJECT

ELECTRICAL	
N	DEFECTIVE ELECTRICAL COMPONENT/MODULE
O	BURNT, ARCING, MISSING PIXELS
P	ELECTRICALLY MISALIGNED/WRONG SETTING
Q	SHORT CIRCUIT
R	OPEN CIRCUIT
S	LEAKING (ELECTRICAL)
T	BAD CONTACT, CONNECTION
T1	BAD EARTH CONNECTION
U	OPEN PATTERN
V	CRACKED PRINTED CIRCUIT BOARD
W	COLD OR NO SOLDERING
X	BRIDGED SOLDERING
Y	WRONG COMPONENT/MODULE
Z	MISSING COMPONENT/MODULE
1	SOFTWARE PROBLEM
11	LOSING DATA FROM MEMORY
12	FAULTY PROGRAM SETTING/INSTALLATION
13	SOFTWARE DEFECTIVE OR INCOMPLETE
14	SOFTWARE SETUP PROBLEM
15	NO IDENTIFICATION / AUTHENTICATION OF PRODUCT OR USER
2	EXHAUSTED, LOW EMISSION
3	NO PROBLEM FOUND (SET WITHIN SPEC)
4	NO PROBLEM FOUND - CUSTOMER MISUNDERSTANDING
5	NO PROBLEM FOUND - LOCAL CONDITIONS
51	FAULTY MAINS VOLTAGE
6	UNABLE TO DIAGNOSE FAULT
7	INCORRECTLY WIRED/ASSEMBLED
81	INCORRECT EQUIPMENT CONNECTION
9	CUSTOMER MISUSE
93	UNAUTHORISED MODIFICATION

REPAIR CODES

A	REPLACEMENT
B	MECHANICAL ALIGNMENT
C	ELECTRICAL ALIGNMENT
D	RESOLDERING
D1	REFITTING, PUT BACK IN POSITION (CONNECTOR, TUBE...)
E	CLEANING
F	LUBRICATION
G	REPAIRED ELECTRICAL PARTS
H	REPAIRED MECHANICAL PARTS
I	MODIFICATION REQUESTED BY MANUFACTURER
J	REMOVED
K	ADDED
L	FUNCTIONAL CHECK
M	SPECIFICATION MEASUREMENT
N	MAINTENANCE
O	REFURBISHING, RECONDITIONING
P	PREVENTIVE PARTS REPLACEMENT

Q	PREVENTIVE ACTION WITHOUT PARTS REPLACEMENT
U	EXPLANATION FOR CUSTOMER
V	COST ESTIMATION REFUSED
W	COST ESTIMATION WITH PARTS
X	COST ESTIMATION WITHOUT PARTS
Y	RETURN WITHOUT REPAIR
Z	PRODUCT EXCHANGE
Z1	PRODUCT EXCHANGE (REPAIR TOO EXPENSIVE)
Z2	PRODUCT EXCHANGE (TOO MANY VISITS/REPAIRS)
Z3	PRODUCT EXCHANGE (PARTS NOT AVAILABLE)
Z4	PRODUCT EXCHANGE (IMPOSSIBLE TO REPAIR)
Z5	PRODUCT EXCHANGE (ON REQUEST OF RETAILER)
Z6	PRODUCT EXCHANGE (ON REQUEST OF MANUFACTURER)
1	SOFTWARE CORRECTION/RESET
2	SOFTWARE UPGRADE
3	PRODUCT UPGRADE (ON REQUEST)

INTEGRATED CIRCUITS BLOCK DIAGRAMS - SYNOPTIQUES INTERNES DES CIRCUITS INTEGRES - INTEGRIERTE SCHALTUNGEN BLOCKSCHALTBILDER - SCHEMA A BLOCCHI DEL CIRCUITI INTEGRATI - VISTA INTERNA DE LOS CIRCUITOS INTEGRADOS

TDA9351N1 MICROPROCESSOR

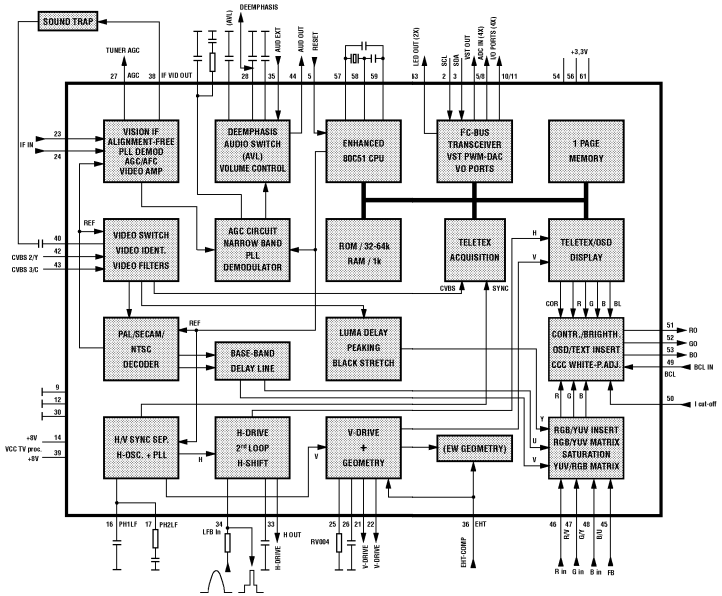

TDA9367N1 MICROPROCESSOR

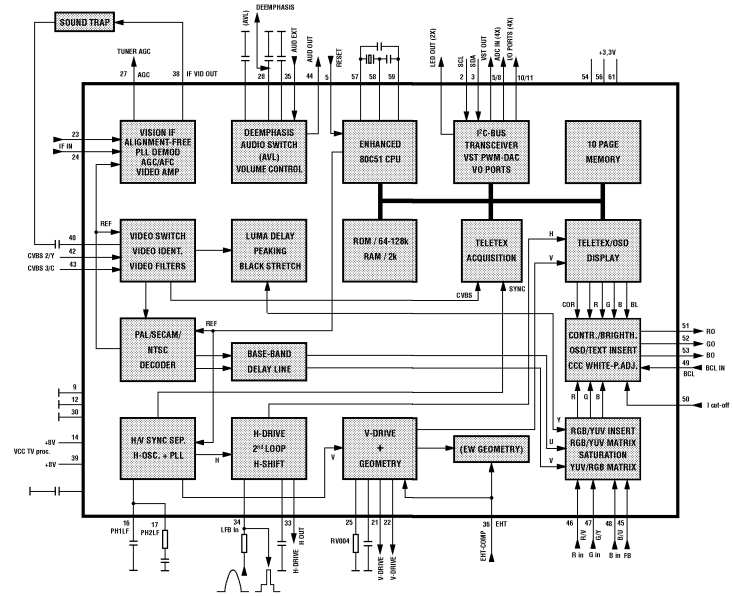

MSP 3415D

MULTISTANDARD SOUND PROCESSOR

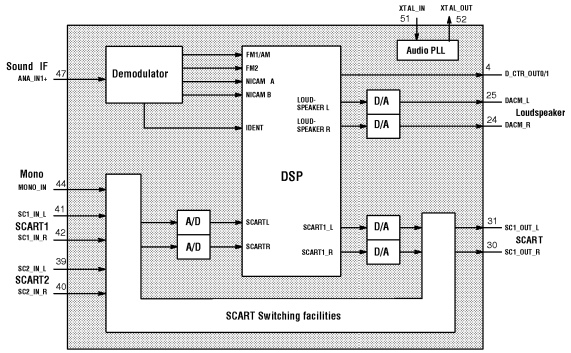

AUDIO BASEBAND PROCESSING

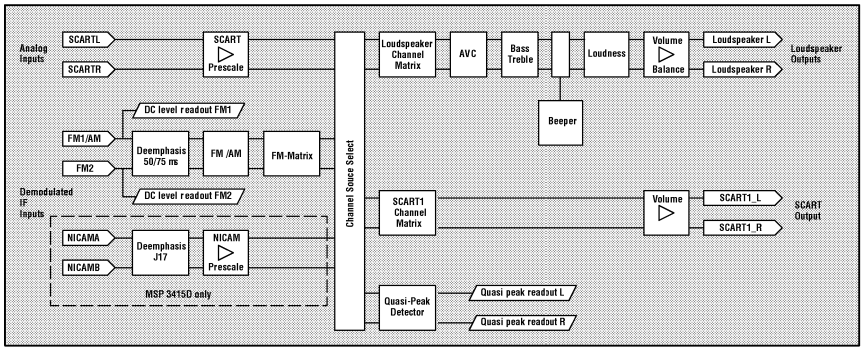

DETECTION PART OF THE MSP3415D

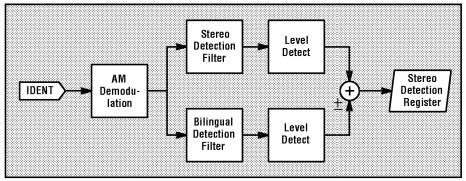

LOGIC CONTROL II20 - IV01

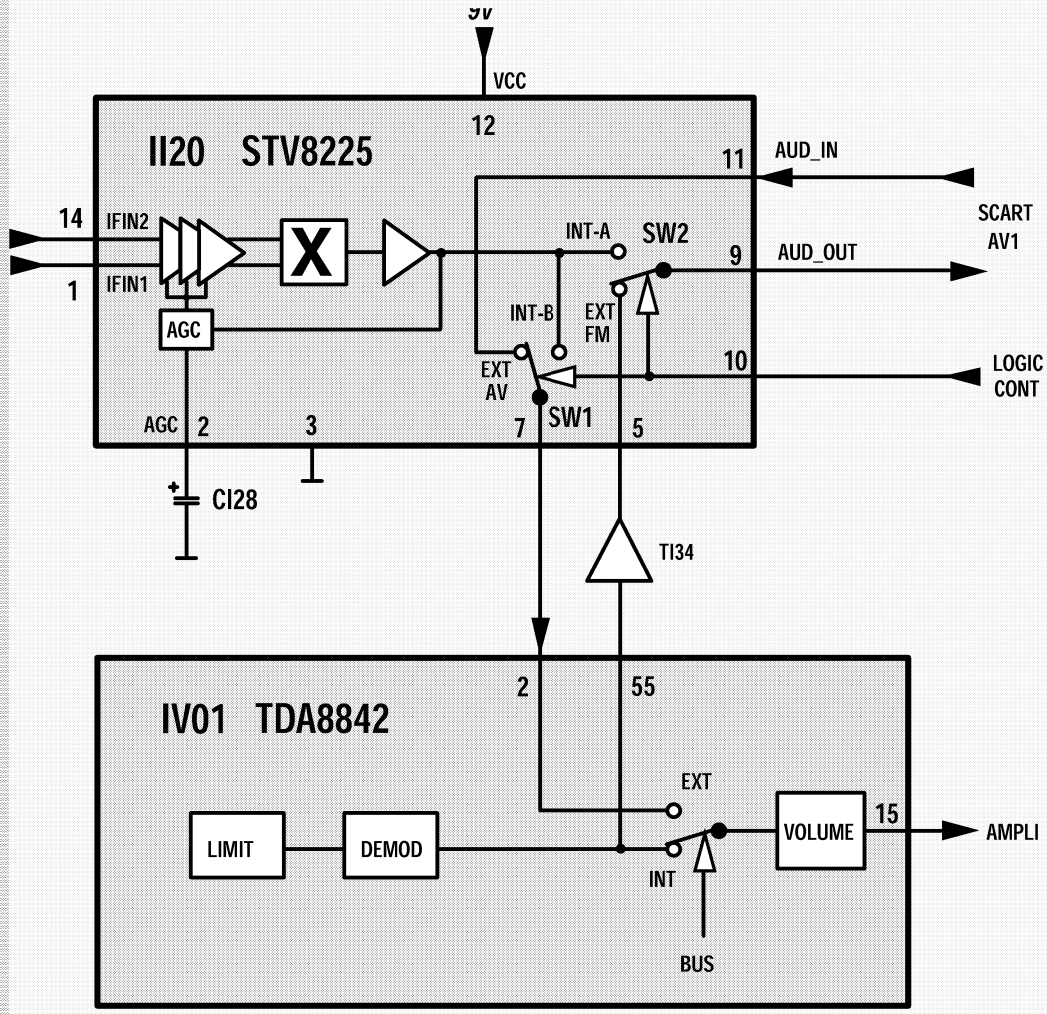

	Logic Control PIN 10 / II20	IV01	II20
BG	0V	INT	SW2 : EXT-FM
LL'	3V	EXT	SW1 : INT- B SW2 : INT- A
LL' AV	5V	EXT	SW1 : EXT-AV SW2 : INT- A
BG AV	7.5V	EXT	SW1 : EXT-AV SW2 : EXT-FM

POWER SUPPLY CHECKS

⚠ Use an isolation transformer when repairing a defective set.

No voltage

+300V voltage absent on CP08. Carry out the following tests :

▪ Mains supply voltage present ?

If correct:

▪ Check FP01 and RP01

- If FP01 is open circuit : check degaussing RP02
- If FP01 or RP01 are open circuit : check TP20
  - If TP20 is short circuit check : replace TP20, TP22 and TP23

TP20 does not switch

Correct voltage present on CP08 but TP20 is not switching.
Carry out the following tests :

▪ Voltage the gate of TP20 :

No voltage or < 2V ?

- check TP20 and RP20.
  - If TP20 or RP20 is open circuit : replace TP22 and TP23 ,RP20,TP20.

- Check DP27, DP21, TP25, DP25, RP21, RP90

- Check TP22 and TP23.

System UB voltage too low

If the operating conditions described below (+300V/CP08, TP020 switching) are correct:
- Check IP01, IP50 and TP52.

POWER SUPPLY CHECKS, LOW VOLTAGE METHOD

- Carefully discharge capacitor CP08
- Shunt resistors RP05 to RP07 using a 10-K resistor.
- Connect point 9 of LP03 to the junction point of RP05/CP06.
- Earth the base of TP52 (to prevent instability).
- Earth the base of TR08 (JR24) (forcing standby to prevent instability).
- Connect a 12V DC supply to pin 9 of LP03.

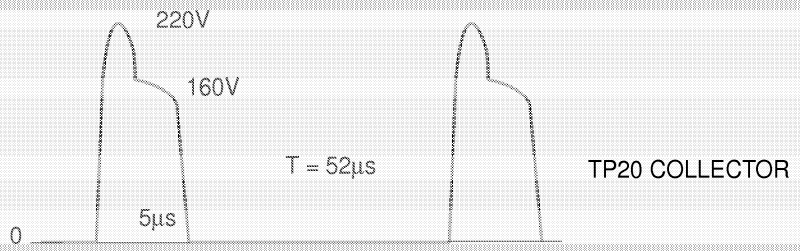

TP20 COLLECTOR

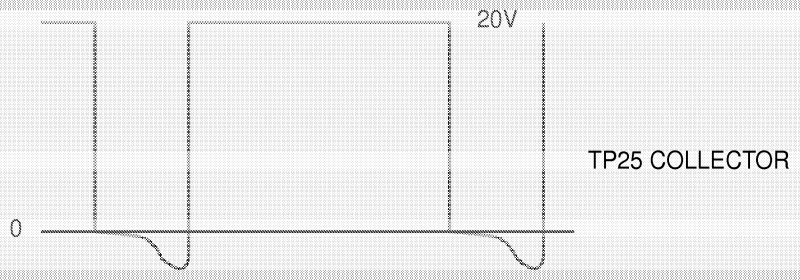

TP25 COLLECTOR

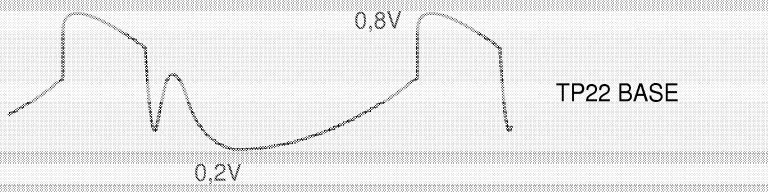

TP22 BASE

UB = 104V, UA = 12,4V

POWER SUPPLY CHECKS USING A LOAD RESISTOR

- Disconnect pin 1 from LL05.
- Earth the base of TP52 (to prevent instability at switch "ON").
- Connect the mains supply voltage .
  Collector TP20 : 580Vpp, T=20µs.
  UB = 104V

- Load the UB supply rail with 220V / 75W bulb.
  Collector TP20 : 580Vpp, T=10µs.
  UB= 104V.

Ⓐ DIFFERENCES BETWEEN EUROPE AND ASIA

POSITION	EUROPE	ASIA
RI48	220R	180R
RI49	150R	180R
CP08	100uF/400	220uF/450V
CP09	1N5F	2N2
DP01	RS205L-L105	RS255-K105
DP82	DELETE	ADD
JP02	AD	DELETE
LP02	OREGA 12MH	PANASONIC
LP03	OREGA SMT17	FRONTIER SRV-3513
RP01	5R1/5W	2R7
RP01B	DELETE	POS 5R0
RP02	ADD 18R0	DELETE
RP02A	DELETE	ADD 5R0
RP03	DELETE	5R
RP05/06/07	270K/0.25W	120K/0.25W
RP41	22K	18K
TP20	STP5NA80FI	STP5NB0FI
ZP01	DELETE	EAZV10D471
DR04	1N4148	DELETE
IR01(TXT)	VT01	VT02
IR01(W/O TXT)	VN01	VN02
LR03	0R	0R
LR04	0R	0R
RR16	220R	3K6
RR17	1K	3K6
RR18	1K	3K6
RR19	1K	3K6
RR20	DELETE	680R0
RR24	ADD	DELETE
RR50	1K	0R
RR80	DELETE	ADD
RR81	ADD	DELETE
CV24	ADD	DELETE
CV25	ADD	DELETE
CV26	ADD	DELETE
CV40	DELETE	ADD
JV58	DELETE	ADD
JV59	DELETE	ADD
JV60	DELETE	ADD
RV16	ADD	DELETE
RV17	ADD	DELETE
RV18	ADD	DELETE
RV19	ADD	DELETE
RV20	ADD	DELETE
RV21	ADD	DELETE
RV22	ADD	DELETE
RV23	ADD	DELETE
RV34	ADD	DELETE
RV35	62R	75R
RV36	ADD	DELETE
RV42	DELETE	ADD
RV44	15R	0R
TV01	ADD	DELETE
TV02	ADD	DELETE
TV03	ADD	DELETE
TV04	ADD	DELETE
TV05	ADD	DELETE
TV06	ADD	DELETE
TV07	ADD	DELETE
TV08	ADD	DELETE
DX04	DELETE	ADD
RX01	390R0	4K7
RX02	390R0	4K7
RX03	390R0	4K7
RX04	220R0	3K3
RX11	6K2	6K2
TX02	ADD	DELETE
BE01	SCART	CINCH

Ⓑ DIFFERENCES BETWEEN 14" AND 20"/21" (CRT BOARDS, POWER)

POSITION	14"	20"/21"
CT51/61/71	820P	270P/330P
CT52/62/72	680P	DELETE
DT51/61/71	JUMPER	1N4148
DT52/62/72	1N4148	DELETE
DT53/63/73	JUMPER	BA185
RT51/61/71	10K	12K
RT55/65/75	DELETE	1K
RT56/66/76	220R	150R
RT59/69/79	DELETE	47R
TT51/61/71	DELETE	BF422
CP23	1N5/50V	2N2/50V
CP90	1000UF/16V	1000UF/25V
DP27	24V	27V
DP40	24V	27V
DP82	DELETE	BYW76
LP90	JUMPER	DELETE
LP91	DELETE	JUMPER
RP29	15K	22K
RP37	18K	33K
RP53	10K	15K
RP90	0.22/0.25W	0.22/0.35W
SP01	DELETE	DELETE

Ⓒ DIFFERENCES BETWEEN MINI NECK AND NARROW NECK PICTURE

POSITION	MINI	NARROW
JT81	ADD	DELETE
JT82	DELETE	ADD
JT83	DELETE	ADD
JT84	ADD	DELETE

Ⓓ PICTURE TUBE MATCHING

CRT	14" CHUNG HWA	14" POLCOLOR	14" THAI CRT	14" ORION	20" CHUNG HWA	20" VIDEOCOLOR	21" CHUNG HWA	21" VIDEOCOLOR
RF09/K	1.37	1.5	1.5	1.37	1.82	1.58	1.82	1.58
RF17/K	1.37	1.5	1.5	1.37	1.82	1.58	1.82	1.58
CL10/pF	680	560	560	680	820	680	680	680
RL14/R	1.0/1W	0.47/1W	1.0/1W	1.0/1W	0.47/1W	0.47/1W	0.47/1W	0.47/1W
LL05	20820700	20820700	20820700	20820700	20801770	20801770	20801770	20801770
	20840590	20840590	20840590	20840590	20835940	20835940	20835940	20835940
CL04/nF	6.6	6.6	6.6	6.6	8.8	6.6	8.2	6.6
CL05/nF	390	470	470	390	470	390	390	390
CL08/nF	-----	-----	-----	-----	-----	-----	-----	-----
CL33/nF	-----	-----	-----	-----	1	1	1	1
DL08	-----	-----	-----	-----	-----	-----	-----	-----
PL01	JUMPER	JUMPER	JUMPER	JUMPER	JUMPER	JUMPER	JUMPER	JUMPER
LL03/uH	-----	-----	-----	-----	5B	5B	5B	5B
LL08/uH	JUMPER	JUMPER	JUMPER	JUMPER	JUMPER	JUMPER	JUMPER	JUMPER
RL03/K	-----	-----	-----	1k/1W	1k/1W	1k/1W	1k/1W	1k/1W
RL07/R	39/1W	39/1W	39/1W	39/1W	33/1W	33/1W	33/1W	33/1W
TL02	S2000N	S2000N	S2000N	S2000N	S2000N	S2000N	S2000N	S2000N
RL07/R	22/1W	22/1W	22/1W	22/1W	15/1W	15/1W	15/1W	15/1W
TL02	BUH515TH	BUH515TH	BUH515TH	BUH515TH	BUH515TH	BUH515TH	BUH5125TH	BUH515TH
RL08/K	-----	-----	-----	-----	-----	-----	-----	-----
RL09/K	3.9	3.9	3.9	3.9	5.6	5.6	5.6	5.6
RL10/K	15.0	15.0	15.0	15.0	13.0	13.0	13.0	13.0
RL12/R	0.68	0.22	0.68	0.68	0.22	0.22	0.22	0.22
RL20/R	15/.5W	15/.5W	15/.5W	15/.5W	47/.35W	47/.35W	47/.35W	47/.35W
RL41/K	22	22.0	22.0	22.0	18.0	18.0	18.0	18.0
RL62/K	82.5	82.5	82.5	82.5	41.2	41.2	41.2	41.2
RP54/K	2	2.0	2.0	2.0	1.82	1.82	1.82	1.82
UB/V	105.5	105.5	105.5	105.5	115.5	115.5	115.5	115.5
RH07	3K9	3K9	3K9	3K9	4K7	4K7	4K7	4K7
DT52/62/72	RCFTK2	RA2K2	TBC	TBC	1K2	1K2	1K2	1K2
RT57/67/77	1N4148	BAV21	TBC	TBC	-	-	-	-

Ⓔ DIFFERENCES AMONG AUDIO OUTPUT POWER REQUIREMENT

	POSITION	1.2W (14"EUROPE)	3W (14" ASIA)	5W (20"/21"ASIA/EU)
	CA03	15nF	22nF	22nF
	CA04	15nF	10nF	22nF
	CA06	DELETE	100nF	100nF
	CA09	DELETE	4n7F	4n7F
	IA21	DELETE	TDA7253	TDA7253
	IA22	TDA7267	DELETE	DELETE
*	JA06	DELETE	JUMPER	JUMPER
*	JA07	DELETE	JUMPER	JUMPER
*	JA08	DELETE	JUMPER	JUMPER
	LA01	LP03=Orage SMT use47uH LP03=TDK SMT USE 22uH	JUMPER	JUMPER
	RA03	12K	12K	15K
	RA04	6K8	33K	5K6
	RA05	2K7	180R	2K7
	RA06	4K7	DELETE	DELETE
	RA13	DELETE	4R7	4R7
	RA25	DELETE	1K2	1K2
	RA26	DELETE	47R	47R
	RA22	3K3	2K4	2K4
	RA31	1R5	22R	22R
	CA24	DELETE	ADD	ADD

* REFER TO PART LIST

Ⓕ DIFFERENCES FOR 5W ASIA/EUROPE ACOUSTIC REQUIREMENTS

POSITION	EUROPE	ASIA
CA03	22nF	39nF
RA03	15K	7K5
RA04	5k6	7k5
RA05	2K7	JUMPER

Ⓖ DIFFERENCES FOR JA01 OPTIONS

POSITION	
JA01	WITH HEADHONE (BE02), JA01 DELETED. WITHOUT HEADHONE (BE02), JA01 ADDED.

Ⓗ DIFFERENCES FOR SCART AND CINCH CONNECTORS

POSITION	SCART WITH II20	SCART WITHOUT II20	CINCH WITHOUT II20
RI02	7K5	10K	5K6
RI03	7K5	10K	5K6
RI72	510R	18K	27K
RI73	560R	4K7	2K
CA21	330pF	470pF	470pF
CI01	270pF	270pF	270pF
CI02	270pF	270pF	270pF

Ⓘ FOR MACROVISION

	POSITION	OTHERS	LL' SETS	REMARK
	CI42	MPC47nF	5mm JUMPER	SOLDERED ON COPPER SIDE
*	JV38	10mm JUMPER	CC 47nF	
	CI80	DELETE	CC 47nF	
	CV31	CC47nF	DELETE	

* REFER TO PART LIST

Ⓙ DIFFERENCES BETWEEN BGHILL' - BGDKK' - BG AND I

	POSITION	BGHILL' (VST)	BGDKK	BG	I	BGHILL'(FST)
	CI20	1NF	-	-	-	1NF
	CI21	10uF	-	-	-	100uF
	CI23	22NF	-	-	-	22NF
	CI24	22NF	-	-	-	22NF
	CI27	22uF	-	-	-	22uF
	CI28	10uF	-	-	-	10uF
	CI37	22NF	22NF	-	-	22NF
	CI38	22NF	22NF	-	-	22NF
	CI39	1NF	1NF	-	-	1NF
	CI40	-	-	-	-	-
	CI50	1P5F	-	-	-	1P5F
	CI60	4N7F	4N7F	-	-	4N7F
	CI61	2P7F	5P6F	-	-	2P7F
	CI62	2P7F	5P6F	-	-	2P7F
	CI63	22PF	39PF	-	-	22PF
	CI64	47PF	47PF	-	-	47PF
	DI20	BA282	-	-	-	BA282
	DI21	BA282	-	-	-	BA282
	DI31	BA282	BA282	0R	-	BA282
	DI32	BA282	BA282	-	0R	BA282
	DI33	1N4148	-	-	-	1N4148
	DI34	0R	-	-	-	0R
	DI60	BA282	BA282	-	-	BA282
	II20	STV8225	-	-	-	STV8225
	JI06	-	-	-	-	-
	JI21	-	0R	0R	0R	-
	JI22	-	220R	220R	220R	-
	JI23	-	-	-	-	-
	JI24	-	0R	0R	0R	0R
	JI25	0R	-	-	-	0R
	JI26	0R	-	-	-	0R
*	JI35	0R	0R	0R	-	0R
*	JI36	0R	0R	-	-	0R
*	JI37	0R	0R	-	-	0R
	JI63	0R	0R	-	-	0R
	LI30	LA 7X7 77.8MHz 135NH	LA 7X7 77.8MHz 150NH	LA7X7 77.8MHz 150NH	LA7X7 77.8MHz 150NH	LA7X7 77.8MHz 135NH
	LI32	LF 4U7H	LF 3U9H	LF 4U7H	LF 4U7H	LF 3U9H
	LI61	LA 7X7 32.4MHz	LA 7X7 29.65MHz	-	-	LA7X7 32.4MHz
	QI20	FILSWL9456M	-	-	-	FILSWL9456M
	QI30	FILSWG1967M	FILSWK2967M	FILSWG1962M	FILSWJ1952M	FILSWG1967M
	QI31	FILC 5M5Hz	FILC 5M5Hz	FILC 5M5Hz	-	FILC 5M5Hz
	QI32	FILC 6M0Hz	FILC 6M5Hz	-	FILC 6M0Hz	FILC 6M0Hz
	QI33	FILCTRP 5M74Hz	FILCTRP 5M74Hz	FILCTRP 5M74Hz	-	FILCTRP 5M74Hz
	QI34	FILCTRP 6M0Hz	FILCTRP 6M5Hz	-	FILCTRP 6M0Hz	FILCTRP 6M0Hz
	RI11	180R	68R	68R	68R	180R
	RI13	4K7	4K7	8K2	3K2	8K2
	RI17	22R	39R	47R	47R	10R
	RI20	2K2	-	-	-	2K2
	RI21	6K8	-	-	-	6K8
	RI22	10K	-	-	-	10K
	RI23	10K	-	-	-	10K
	RI24	100R	-	-	-	100R
	RI38	1K8	1K8	-	-	1K8
	RI39	1K8	1K8	-	-	1K8
	RI40	-	-	-	-	-
	RI41	4K7	4K7	-	-	4K7
	RI45	120R	100R	120R	120R	100R
	RI56	12K	0R	0R	0R	12K
	RI57	-	47R	47R	47R	-
	RI58	-	1K	1K	1K	-
	RI60	3K9	3K9	-	-	3K9
	RI61	2K7	2K7	-	-	2K7
	RI62	2K7	2K7	-	-	2K7
	RI63	2K7	22K	-	-	2K7
	RI64	150K	150K	-	-	150K
	TI20	DTC144EK	-	-	-	DTC144EK
	TI21	DTC144EK	-	-	-	DTC144EK
	TI32	DTC144EK	DTC144EK	-	-	DTC144EK
	TI35	-	BC548B	BC548B	BC548B	-
	TI60	BC848B	BC848B	-	-	BC848B
	CR15	10UF	-	-	-	10UF
	CR17	100PF	100PF	-	-	100PF
	CR27	220PF	-	-	-	220PF
	CR38	1NF	-	-	-	1NF
*	JR11	0R	-	-	-	0R
*	JR13	0R	-	-	-	0R
	LR11	0R	0R	-	-	0R
	RR28	1K5	-	-	-	1K5
	RR29	3K9	-	-	-	3K9
	RR44	1K	1K	-	-	1K
	RR51	10K	-	-	-	10K
	RR66	100R	100R	-	-	100R
	TR06	BC848B	-	-	-	BC848B

* REFER TO PART LIST

WARNING : *Before servicing this chassis read the safety recommendations.*

ATTENTION : *Avant toute intervention sur ce châssis, lire les recommandations de sécurité.*

ACHTUNG : *Vor jedem Eingriff auf diesem Chassis, die Sicherheitsvorschriften lesen.*

ATTENZIONE : *Prima di intervenire sullo chassis, leggere le norme di sicurezza.*

IMPORTANTE : *Antes de cualquier intervención, leer las recomendaciones de seguridad.*

Do not disconnect modules when they are enregized! Repairs on power supply section are to be carried out only with isolating transformer.

Ne pas retirer les modules lorsqu'ils sont sous tension. N'effectuer les travaux de maintenance sur la partie reliée au secteur (Switch Mode) qu'au travers d'un transformateur d'isolement.

Module nicht bei eingeschaltetem Gerät entfernen ! Servicearbeiten am Netzteil nur unter Verwendung eines Regeltrenntrafos durchführen.

Non scollegare i moduli quando sono alimentati! Intraprendere riparazioni sulla sezione alimentatore solo con trasformatore isolante.

No desconectar los módulos cuando están activados. Las reparaciones en la sección de alimentación de energía deben ser ejecutadas solamente con un transformador de separación.

⚠ Indicates critical safety components, and identical components should be used for replacement. Only then can the operational safety be garanteed.

Le remplacement des éléments de sécurité (repérés avec le symbole ⚠) par des composants non homologués selon la Norme CEI 65 entraine la non-conformité de l'appareil. Dans ce cas, la responsabilité du fabricant n'est plus engagée.

Wenn Sicherheitsteile (mit dem Symbol⚠ gekennzeichnet) nicht durch Original - Ersatzteile ersetzt werden, erlischt die Haftung des Herstellers.

La sostituzione degli elementi di sicurezza (marcati con il segno⚠) con componenti non omologati secondo la norma CEI 65 comporta la non conformitá dell'apparecchio. In tal caso è "esclusa la responsabilità " del costruttore.

La sustitución de elementos de seguridad (marcados con el simbolo ⚠) por componentes no homologados segun la norma CEI 65, provoca la no conformidad del aparato. En ese caso, el fabricante cesa de ser responsable.

Note : During measurements in the power supply unit, use the primary power unit ground (Emit. TP060).

Attention : Mesures dans le bloc alimentation. Utiliser la masse du bloc alimentation (Emet. TP060).

Achtung : Bei Messungen im Primärnetzteil. Primärnetzteilmasse verwenden (Emit. TP060).

Attentionze : Misure nell'alimentatore primario. Usare massa alimentazione primario (Emet. TP060).

Cuidado : Medida en el bloque de alimentación. Utilizar la masa del bloque de alimentación (Emet. TP060).

MEASUREMENT CONDITIONS - CONDITIONS DE MESURES - MESSBEDINGUNGEN CONDIZIONI DI MISURA - CONDICIONES DE MEDIDAS

RECEIVER :
Bar test pattern : PAL, I standard, 100% white.

- On UHF, input level 1 mV
- Via the scart socket, input level 1 Vpp

Colour, contrast and brightness at mid-position, sound at minimum.
Programme selected : PR 01.
DC voltages measured between the point and earth using a digital voltmeter.

RECEPTEUR :
Mire de barres : SECAM, Norm L, Blanc 100%.

- En UHF, niveau d'entrée 1 mV
- Par la prise Péritélévision, niveau d'entrée 1Vcc.

Couleur, contraste, lumière à mi-course, son minimum.
Programme affecté PR 01.
Tensions continues relevées par rapport à la masse avec un voltmètre numérique.

EMPFÄNGER :
Farbbalken : PAL, Norm G, Weiss 100%

- Bei UHF Eingangspegel 1 mV.
- Über die Scartbuchse : Eingangspegel 1 Vss.

Farbe, Kontrast, Helligkeit in der Mitte des Bereichs, Ton auf Minimum.
Zugeordnetes Programm PR 01.
Gleichspannungen mit einem digitalen Voltmeter zur Masse gemessen.

RICEVITORE :
Monoscopio per barre : PAL, norma G. bianco 100%.

- In UHF, livello d'entrata 1 mV,
- Per la presa SCART, livello d'entrata 1 Vcc.

Colore, Contrasto, Luce a metä corsa, Suono minimo.
Programma designato PR 01.
Tensioni continue rilevate rispetto alla massa con un voltametro numerico.

RECEPTOR :
Mira de barras : PAL, norma G, blanco 100%.

- En UHF, nivel de entrada 1 mV,
- Por la toma Peritelevision, nivel de entrada 1 Vpp.

Color, Contraste, luz a mitad de carrera, Sonido minimo.
Programa afectado PR 01.
Tensiones continuas marcadas en relacion a la masa con un voltimetro digital.

THOMSON MULTI MEDIA

TV

Brandt FERGUSON NORDMENDE SABA TELEFUNKEN THOMSON

PARTS LIST
LISTE PIECES DETACHEES
ERSATZTEILLISTE
LISTA PARTI DI RICAMBIO
LISTA DE PIEZAS DE REPUESTO

FERGUSON
M5115UT
Chassis TX807

MODULES

MAIN T807V26C705030

FL01	RXE017	⚠	10529690
IA21	TDA7253		20203120
IF01	TDA9302H		20819860
II01	KIA78L09BP		20835320
IP50	TL431		15069010
IR01	TMP47C1637N TX807-VT11		20925200
IR02	ST24W04		20659470
IV01	TDA8842		20751980
IX01	STV5348D		20765620
IP01	TLP621 GR(D4-LF2 T)	⚠	20827900
TA21,**TI**35, **TR**01,**TX**02	BC548B		16000930
TA22	BC557B		16001060
TA23,**TL**01	BC337-40		45001466
TH01,**TP**22,52, **TR**05,08	BC547B		16000890
TH02,03,04	BC857C SMD		50854389
TI11	MMBTH10L SMD		16006500
TI31,33,34, **TR**04,09,**TV**01, 02,04,06	BC847B SMD		11070770
TL02	S2000N/BU508A		20578720
TL03,**TT**81	BC327-40		16000450
TL50	2SC2236Y		16000220
TP20	STP3NA80FI	⚠	20818740
TP23	BC327-25		16000440
TP25,**TX**01,03	BC558B		16001110
TR02	BCR185 SMD		16006900
TR03	BC848C SMD		20438166
TR07	2SA1020Y		16003740
TR10	BC547C		16000900
TT51,61,71	BF422		16003090
TT52,62,72	2SC2482N		16003760
TT53,63,73	BF423		16003110
TV03,05,07	RN2410		20824180
TV08	RN1409 SMD		20688820

DA01,**DK**05, **DL**60,63,**DP**37, 38,**DR**03,04, **DT**51,61,71, **DV**01,04,05,06, 09,10,11,**DX**01, 02,03	1N4148	44009209
DA02,**DT**82	BZX55B9V1	70438220
DF01,**DL**05,06, 15,20,45,47, 50,**DP**25,90	RGP10G	10459090
DH01	ZTK33A	20494820
DK01	MV5491A LED	10036730
DK04	BZX55C5V6/ZPD5V6	44025401
DL01	1N4001	16008160
DL04	BY228	10406470
DL21,**DP**26	BAV21	44044407
DL25,**DP**27,40	BZX55C27	60447870
DL51	1N5233B	20264850
DL62	ZPD4,7/BZX55C4V7	20475400
DP01	RS205L-K105	20807220
DP21	BZX55B15/ZPD15 2%	80444020
DP23,30	ZPD8,2	44021504
DP57	BZX55C6V8	50890650
DP80	BYW76	16009120
DR02	BZX55B5V1/ZPD5V1 2%	44035702
DV03	MUR115/BYW100-150	44073604
DX05	BZX55C3V3	30948790
QC01	4M433619HZ	10087710
QC02	3M579545HZ	10087720
QI30	OFWJ1952M FOS	20232080
QI32	6M0HZ	48039700
QI34	6M0HZ	48042300
QR01	6M0HZ	20767900
QX01	13M875HZ	10253990
LI30	77M8HZ	20862330

RA13	4R7 OHM 5% 0,25W	⚠	35032200
RL12,16,**RP**90	0R22 OHM 5% 0,50W	⚠	10305450
RL14	0R47 OHM 5% 1W	⚠	15042720
RL20	47R0 OHM 5% 0,30W	⚠	13000690
RL45	0R1 OHM 10% 0,40W	⚠	15022510
RL51	1R8 OHM 5% 0,30W	⚠	15009780
RP01	5R1 OHM 10% 2,5W		10547070
RP02	18R0 OHM 230V PTC	⚠	10509980
RP15	10M0 OHM 5% 0,70W	⚠	10074320
RP20	1R0 OHM 5% 2,50W		10383240
RP56,58	41K2 OHM 1% 0,25W		50883790
RR04	8R2 OHM 5% 0,25W	⚠	15010150
RR72	200R0 OHM 1% 0,25W		80437540
RT55,58,65,68, 75,78	1K0 0HM 5% 0,30W	⚠	15009700
RT92	1K5 OHM 5% 0,50W		10121880
CL04	6N6F 1K6V		80304700
CL05	390N0F 10% 250V		43171400
CL10	680P0F 10% 3K0V		20248410
CL16,40,50	330P0F 10% 1K0V		14030320
CL20	22U0F 20% 250V	⚠	13071070
CL33	1N0F 20% 1K0V		20388780
CP01,02	100N0F 20% 275V	⚠	10331520
CP04	10N0F 20% 400V		14033040
CP05,06	4N7F 1K0V		10058740
CP08	100U0F 385V		30662900
CP09	1N5F 10% 1K0V		20338740
CP15	1N0F 20% 400V	⚠	20822690
CP82	680P0F 10% 1K0V		20505600
CP91	2N2F 10% 250V	⚠	20833060
CT90	2N2F 2K0V		14036020
LL01	DRIVER		20814520
LL03		⚠	80367500
LL05	DSTLH27	⚠	20835940
LP02		⚠	10395160
LP03	SMT17	⚠	10528770

R : RECYCLED PART
: PIECE RECYCLEE
: AUSTAUSCHTEILE
: RICAMBIO RICICLATO
: MODULO REPROCESADO

For any requests, please contact THOMSON multimedia after sales service area
Pour toutes précisions, contactez votre service apres vente local THOMSON multimedia
Für weitere Auskünfte, wenden Sie sich bitte an die THOMSON multimedia Kundendienste
Per precisazioni, contattare l'assistenza tecnica THOMSON multimedia
Para cualquier pregunta, por favor contactar con el responsable de zona del servicio postventa de THOMSON multimedia

06 / 98 35066010
REV. N° 0 00 / 00 00000000

No copying, translation, modification on other use authorized. All rights reserved worldwide. • Tous droits de reproduction, de traduction, d'adaptation et d'exécution réservés pour tous les pays. • Sämtliche Urheberrechte an diesen Texten und Zeichnungen stehen uns zu. Nachdrucke, Vervielfältigungen - auch auszugsweise - nur mit unserer vorherigen Zustimmung zulässig. Alle Rechte vorbehalten. • I diritti di riproduzione, di traduzione, e esecuzione sono riservati per tutti i paesi. • Derechos de reproduccion, de traduccion, de adaptacion y de ejecucion reservados para todos los paises.

OTHER PARTS
AUTRES PIECES
SONSTIGE TEILE
ALTRE PARTI
OTRAS PIEZAS

BE01	SCART SOCKET PRISE PERITEL EURO-AV-BUCHSE EUROPRESA NORMALIZZATA EUROCONECTOR		10362830
BE02	HEADPHONE SOCKET PRISE CASQUE KOPFHOERERBUCHSE PRESA JACK TOMA JACK		20345310
BE03	CINCH SOCKET PRISE CINCH CINCH-BUCHSE PRESA CINCH TOMA CINCH		11007219
BE04	HEADPHONE SOCKET PRISE CASQUE KOPFHOERERBUCHSE PRESA JACK TOMA JACK		30909940
BT02	CATHODE RAY TUBE SOCKET SUPPORT TUBE CATHODIQUE BILDROEHRENFASSUNG SUPPORTO TUBO CATODICO SOPORTE T.R.C	⚠	20631370
FP01	1A6T TIME-LAG FUSE 1A6T FUSIBLE TEMPORISE 1A6T SICHERUNG 1A6T FUSIBILE TEMPORIZZATO 1A6T FUSIBLE TEMPORIZADO	⚠	48064700
NH01	CTT5045 UHF/VHF TUNER CTT5045 TETE UHF/VHF CTT5045 UHF/VHF TUNER CTT5045 TUNER UHF/VHF CTT5045 SINTONIZADOR UHF/VHF	R	20765490
SK01,02,03,04	MICROSWITCH MICRO CONTACTEUR MIKROSCHALTER MICROINTERRUTTORE MICROCONTACTOR		30011100
SP05	ON/OFF SWITCH CONTACTEUR MARCHE/ARRET EIN-AUS SCHALTER CONTATTORE ACCESO/SPENTO CONTACTOR MARCHA/PARADA	⚠	20612390

EQUIPMENT/PRESENTATION
EQUIPEMENT/PRESENTATION
AUSSTATTUNG/GEHAEUSE
PARTI VARIE
EQUIPO/PRESENTACION

FRONT PANEL FACADE FRONTPLATTE PANNELLO FRONTALE PANEL FRONTAL		25314870
LOGO FERGUSON LOGO FERGUSON SCHRIFTZUG FERGUSON MARCHIO FERGUSON LOGOTIPO FERGUSON		25295050
8R OHM 8W LOUDSPEAKER 50X90 8R OHM 8W HAUT PARLEUR 50X90 8R OHM 8W LAUTSPRECHER 50X90 8R OHM 8W ALTOPARLANTE 50X90 8R OHM 8W ALTAVOZ 50X90		10377680
REAR PANEL DOS RUECKWAND PANNELLO POSTERIORE TAPA POSTERIOR	⚠	25310900
POWER SUPPLY LEAD (UK) CORDON D'ALIMENTATION (UK) NETZKABEL (UK) CAVO DI ALIMENTAZIONE (UK) CABLE DE ALIMENTACION (UK)	⚠	20492600
ON/OFF BUTTON TOUCHE MARCHE/ARRET EIN-AUS TASTE TASTO ACCESSO/SPENTO TECLA MARCHA/PARADA		25314630
BUTTON STRIP BARRETTE DE TOUCHES TASTENLEISTE PIATTINA TASTI PLACA DE TECLAS		25317290
A48EAX13X01 CATHODE RAY A48EAX13X01 TUBE CATHODIQUE A48EAX13X01 FARBBILDROEHRE A48EAX13X01 TUBO CATODICO A48EAX13X01 T.R.C	⚠	10543360
DEGAUSSING COIL BOBINE DE DEMAGNETISATION ENTMAGNETISIERUNGSSPULE BOBINA DI SMAGNETIZZAZIONE BOBINA DE DESIMANTACION	⚠	47320196
F3092 REMOTE CONTROL F3092 TELECOMMANDE F3092 FERNBEDIENUNG F3092 TELECOMANDO F3092 TELEMANDO		20647490
FOLDING BOX EMBALLAGE CARTON KARTON IMBALLAGGIO CARTONE EMBALAJE CARTON		25329710
FITTING UPPER CALE SUPERIEURE POLSTER OBEN DISTANZIATORE SUPERIORE CALZO SUPERIOR		25312360
FITTING DOWNER CALE INFERIEURE POLSTER UNTEN DISTANZIATORE INFERIORE CALZO INFERIOR		25312390

INSTRUCTIONS
NOTICES
ANLEITUNGEN
ISTRUZIONI
MANUALE

M5115UT PARTS LIST M5115UT LISTE DE PIECES DETACHEES M5115UT ERSATZTEILLISTE M5115UT LISTA PARTI DI RICAMBIO M5115UT LISTA DE PIEZAS DE REPUESTO	35066010
TX807 SERVICE MANUEL EUROPE TX807 DOC TECHNIQUE EUROPE TX807 TECHNISCHE DOKUMENTATION EUROPE TX807 DOCUMENTAZIONE TECNICA EUROPE TX807 DOCUMENTACION TECNICA EUROPE	35058840
M5115UT UM FERGUSON GB M5115UT NU FERGUSON GB M5115UT BA FERGUSON GB M5115UT IU FERGUSON GB M5115UT IU FERGUSON GB	25335610

The description and characteristics given here are of informative significance only, and non committal. To keep up the high quality of our products, we reserve the right to make any changes or improvement without previous notice. • Les descriptions et caractéristiques figurant sur ce document sont données à titre d'information et non d'engagement. En effet, soucieux de la qualité de nos produits, nous nous réservons le droit d'effectuer, sans préavis, toute modification ou amélioration. • Die Beschreibungen und Daten in dieser Anleitung dienen nur zur Information und sind nicht bindend. Um die Qualität unserer Produkte ständig zu verbessern, behalten wir uns das Recht auf Änderungen vor. • Le descrizioni e le caratteristiche date su questo documento sono fornite a semplice titolo informativo e senza impegno. Ci riserviamo il diritto di eseguire, senza preavviso, qualsiasi modifica o miglioramento. • Las descripciones y características que figuran en este documento se dan a título de información y no de compromiso. En efecto, en bien de la calidad de nuestros productos, nos reservamos el derecho de efectuar, sin previo aviso, cualquier modificación o mejora.

THOMSON multimedia S.A au capital de 12375616000 FF - 46, Quai Alphonse Le Gallo 92648 Boulogne Cedex FRANCE - RCS NANTERRE B 333 773 174

THOMSON MULTI MEDIA

TV

Brandt FERGUSON SABA TELEFUNKEN THOMSON

PARTS LIST
LISTE PIECES DETACHEES
ERSATZTEILLISTE
LISTA PARTI DI RICAMBIO
LISTA DE PIEZAS DE REPUESTO

THOMSON
20DG15ES
Chassis TX807C

MODULES

MAIN T807CF96C002011 10674920

GK001	TSOP1333		25358570
IB001	TDA6107Q/N2		10659660
IF001	TDA9302H		20819860
IP050	TLP621 GR(D4-LF2 T)	⚠	20827900
IP090	STV8130		10658850
IP095	MC7805/ACT		46007400
IR001	M22W04		10456150
IS001	TDA7253		20203120
IV001	TDA9351N1		10649480
TL035	S2055N		20578760
ZP092	MP315	⚠	10575090
ZP094	MP32	⚠	25405650

TI030	DTC144EK SMD		16007030
TL031,**TP**032, 053,054,061, 070,**TS**002,004, 050,051,**TV**020, 022	BC846B SMD		16006260
TL032,**TP**022	BC337-40		45001466
TL050,**TP**025, 026,031,060, 080,**TV**021	BC856B SMD		16006310
TL060	RN2417 SMD		25423180
TL061,062	RN1409 SMD		20688820
TP020	STP3NB90FP		25411640
TP058,072,081, **TR**002	BCR141 SMD		16006890
TP071,**TR**001	BCR185 SMD		16006900

DB030,031,050, 051,070,071, **DJ**020,**DP**031, 032	BAV21		44044407
DF002,**DL**004, 005,015,030, 060,**DP**022,033, 034,035,037, 040,057,058, 070,081,**DV**070, 071	1N4148		44009209
DF010,**DL**011, 013,035,**DP**095	1N4001		16008160
DH001	BZX55C30		80444170
DI030	BA782S		20542050
DL010,012,025, 040,**DP**026	RGP10G		10459090
DL014	BZX55B9V1		70438220
DP001,002,003, 004	BYW27-1000		10455390
DP021,043	BZX55B16		11073430
DP023	BZX55C7V5		80444150
DP027	BZX55C27		60447870
DP030	BZX55C11		11073670
DP080	FUF4005/MUR160		16009580
DP090,092	MUR120		10564670
DR001	BZX55B5V1/ZPD5V1 2%		44035702
GE001	LTL307/EE LED		16010330

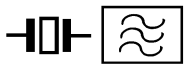

FI010	OFWK6270K FOS		10503340
FI030	40M4HZ		10664720
FI050	5M5HZ		10658370
QV001	12M0HZ		25418130

PP051	470R0 OHM		10260350

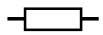

RB001	1K5 OHM 5% 0,50W		10121880
RB013	10R0 OHM 10% 0,50W		15000160
RB031,051,071	560R0 OHM 10% 0,50W		10257590
RF004,006	1K5 OHM 1% 0,25W		80437630
RF007	1R5 OHM 1% 0,70W		10451140
RF008	2R2 OHM 5% 0,25W	⚠	15009870
RF010	1R5 OHM 5% 0,25W	⚠	13063950
RL010	0R1 OHM 10% 0,40W	⚠	15022510
RL012	0R22 OHM 5% 0,50W	⚠	10305450
RL040	47R0 OHM 5% 0,35W	⚠	20923340
RL090	86K6 OHM 1% 0,25W		15021680
RP002	18R0 OHM 230V PTC	⚠	10509980
RP008	5R1 OHM 10% 2,50W		10472390
RP020	1R0 OHM 5% 2,50W		10383240
RP050	10M0 OHM 5% 0,70W	⚠	10074320
RP054	68K1 OHM 1% 0,70W		10147740
RS028	18R0 OHM 5% 0,30W	⚠	15009660
RS040	4R7 OHM 5% 0,35W	⚠	10226310
RS056	0R47 OHM 10% 0,40W	⚠	15022650

CB001	10N0F 3K0V		14036450
CB004	47N0F 5% 250V		40433080
CL003	10N0F 5% 400V		10588870
CL010,012,040, **CP**089,093	330P0F 20% 1K0V		14035270
CL024	440N0F 5% 250V		43352100
CP001	100N0F 20% 275V	⚠	10331520
CP003	68N0F 20% 250V		10256210
CP004	1N5F 10% 1K0V		20338740
CP005,006	4N7F 1K0V		10058740
CP009	3N3F 20% 1K6V		10607950
CP050	2N2F 20% 400V	⚠	10344870
CP082	1N0F 10% 500V		10546570

LL005	DSTLH27F	⚠	10658470
LL032	DRIVER		20936440
LP002		⚠	10654720
LP003	SMT17	⚠	10674880

R : RECYCLED PART
: PIECE RECYCLEE
: AUSTAUSCHTEILE
: RICAMBIO RICICLATO
: MODULO REPROCESADO

For any requests, please contact THOMSON multimedia after sales service area
Pour toutes précisions, contactez votre service apres vente local THOMSON multimedia
Für weitere Auskünfte, wenden Sie sich bitte an die THOMSON multimedia Kundendienste
Per precisazioni, contattare l'assistenza tecnica THOMSON multimedia
Para cualquier pregunta, por favor contactar con el responsable de zona del servicio postventa de THOMSON multimedia

No copying, translation, modification on other use authorized. All rights reserved worldwide. • Tous droits de reproduction, de traduction, d'adaptation et d'exécution réservés pour tous les pays. • Sämtliche Urheberrechte an diesen Texten und Zeichnungen stehen uns zu. Nachdrucke, Vervielfältigungen - auch auszugsweise - nur mit unserer vorherigen Zustimmung zulässig. Alle Rechte vorbehalten. • I diritti di riproduzione, di traduzione, e esecuzione sono riservati per tutti i paesi. • Derechos de reproduccion, de traduccion, de adaptacion y de ejecucion reservados para todos los paises.

OTHER PARTS
AUTRES PIECES
SONSTIGE TEILE
ALTRE PARTI
OTRAS PIEZAS

BB005	CATHODE RAY TUBE SOCKET SUPPORT TUBE CATHODIQUE BILDROEHRENFASSUNG SUPPORTO TUBO CATODICO SOPORTE T.R.C	⚠	80298800
BJ005	CINCH SOCKET PRISE CINCH CINCH-BUCHSE PRESA CINCH TOMA CINCH		11007219
BJ006	CINCH SOCKET PRISE CINCH CINCH-BUCHSE PRESA CINCH TOMA CINCH		30909940
BQ012	HEADPHONE SOCKET PRISE CASQUE KOPFHOERERBUCHSE PRESA JACK TOMA JACK		20345310
BV001	SCART SOCKET PRISE PERITEL EURO-AV-BUCHSE EUROPRESA NORMALIZZATA EUROCONECTOR		10362830
FP001	1A6T TIME-LAG FUSE 1A6T FUSIBLE TEMPORISE 1A6T SICHERUNG 1A6T FUSIBILE TEMPORIZZATO 1A6T FUSIBLE TEMPORIZADO	⚠	48064700
NH001	CTT5010 UHF/VHF TUNER CTT5010 TETE UHF/VHF CTT5010 UHF/VHF TUNER CTT5010 TUNER UHF/VHF CTT5010 SINTONIZADOR UHF/VHF		20812280
SK001,002,003,004	MICROSWITCH MICRO CONTACTEUR MIKROSCHALTER MICROINTERRUTTORE MICROCONTACTOR		30011100
SP005	ON/OFF SWITCH CONTACTEUR MARCHE/ARRET EIN-AUS SCHALTER CONTATTORE ACCESO/SPENTO CONTACTOR MAECHA/PARADA	⚠	25442860

EQUIPMENT/PRESENTATION
EQUIPEMENT/PRESENTATION
AUSSTATTUNG/GEHAEUSE
PARTI VARIE
EQUIPO/PRESENTACION

FRONT PANEL AND BUTTON GY25TH FACADE ET TOUCHES GY25TH FRONTPLATTE UND TASTE GY25TH PANNELLO FRONTALE E TASTO GY25TH PANEL FRONTAL Y TECLA GY25TH		25459230
REAR PANEL GY26TH DOS GY26TH RUECKWAND GY26TH PANNELLO POSTERIORE GY26TH TAPA POSTERIOR GY26TH	⚠	25459240
INFRARED WINDOW GLACE INFRAROUGE INFRAROTOT FENSTER VETRO INFRAROSSO CRISTAL INFRARROJO		25403400
LOGO THOMSON LOGO THOMSON SCHRIFZUG THOMSON MARCHIO THOMSON LOGOTIPO THOMSON		25381430
16R OHM 10W LOUDSPEAKER 50X90 16R OHM 10W HAUT PARLEUR 50X90 16R OHM 10W LAUSPRECHER 50X90 16R OHM 10W ALTOPARLANTE 50X90 16R OHM 10W ALTAVOZ 50X90		10316960
ON/OFF BUTTON GY25TH TOUCHE MARCHE/ARRET GY25TH EIN-AUS TASTE GY25TH TASTO ACCESO/SPENTO GY25TH TECLA MARCHA/PARADA GY25TH		25459250
POWER SUPPLY LEAD CORDON D'ALIMENTATION NETZKABEL CAVO DI ALIMENTAZIONE CABLE DE ALIMENTACION	⚠	10260830
A48EAX13X01 CATHODE RAY TUBE A48EAX13X01 TUBE CATHODIQUE A48EAX13X01 FARBBILDROEHRE A48EAX13X01 TUBO CATODICO A48EAX13X01 T.R.C	⚠	10543360
DEGAUSSING COIL BOBINE DE DEMAGNETISATION ENTMAGNETISIERUNGSSPULE BOBINA DI SMAGNETIZZAZIONE BOBINA DE DESIMANTACION	⚠	47320196
RCT100 REMOTE CONTROL RCT100 TELECOMMANDE RCT100 FERNBEDIENUNG RCT100 TELECOMANDO RCT100 TELEMANDO		10546340
FOLDING BOX EMBALLAGE CARTON KARTON IMBALLAGGIO CARTONE EMBALAJE CARTON		25380830
FITTING UPPER CALE SUPERIEURE POLSTER OBEN DISTANZIATORE SUPERIORE CALZO SUPERIOR		25403380
FITTING DOWNER CALE INFERIORE POLSTER UNTEN DISTANZIATORE INFERIORE CAZO INFERIOR		25403370

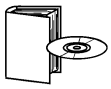

20DG15ES PARTS LIST 20DG15ES LISTE DE PIECES DETACHEES 20DG15ES ERSATZTEILLISTE 20DG15ES LISTA PARTI DI RICAMBIO 20DG15ES LISTA DE PIEZAS DE REPUESTO	35125520
TX807C/CS SERVICE MANUAL TX807C/CS DOC TECHNIQUE TX807C/CS TECHNISCHE DOKUMENTATION TX807C/CS DOCUMENTAZIONE TECNICA TX807C/CS DOCUMENTACION TECNICA	35110300
CDROM TX807 VERSION 2 CDROM TX807 VERSION 2 CDROM TX807 VERSION 2 CDROM TX807 VERSION 2 CDROM TX807 VERSION 2	35110290
TX807C/CS UM D/F/I/GB/GR/DK/NL/S/E/P TX807C/CS NU D/F/I/GB/GR/DK/NL/S/E/P TX807C/CS BA D/F/I/GB/GR/DK/NL/S/E/P TX807C/CS IU D/F/I/GB/GR/DK/NL/S/E/P TX807C/CS IU D/F/I/GB/GR/DK/NL/S/E/P	50011430

The description and characteristics given here are of informative significance only, and non committal. To keep up the high quality of our products, we reserve the right to make any changes or improvement without previous notice. • Les descriptions et caractéristiques figurant sur ce document sont données à titre d'information et non d'engagement. En effet, soucieux de la qualité de nos produits, nous nous réservons le droit d'effectuer, sans préavis, toute modification ou amélioration. • Die Beschreibungen und Daten in dieser Anleitung dienen nur zur Information und sind nicht bindend. Um die Qualität unserer Produkte ständig zu verbessern, behalten wir uns das Recht auf Änderungen vor. • Le descrizioni e le caratteristiche date su questo documento sono fornite a semplice titolo informativo e senza impegno. Ci riserviamo il diritto di eseguire, senza preavviso, qualsiasi modifica o miglioramento. • Las descripciones y características que figuran en este documento se dan a título de información y no de compromiso. En efecto, en bien de la calidad de nuestros productos, nos reservamos el derecho de efectuar, sin previo aviso, cualquier modificación o mejora.

THOMSON multimedia S.A au capital de 932 655 840 € - 46, Quai Alphonse Le Gallo 92648 Boulogne Cedex FRANCE - RCS NANTERRE B 333 773 174

PARTS LIST
LISTE PIECES DETACHEES
ERSATZTEILLISTE
LISTA PARTI DI RICAMBIO
LISTA DE PIEZAS DE REPUESTO

THOMSON
14MG15ET
Chassis TX807C

MODULES

MAIN T807CF911002010 10675370

GK001	TSOP1333		25358570
IB001	TDA6107Q/N2		10659660
IF001	TDA9302H		20819860
IP050	TLP621 GR(D4-LF2 T)	⚠	20827900
IP090	STV8130		10658850
IP095	MC7805/ACT		46007400
IR001	M22W04		10456150
IS001	TDA7253		20203120
IV001	TDA9351N1		10649480
TL035	S2055N		20578760
ZP094	MP32	⚠	25405650

TI030	DTC144EK SMD		16007030
TL031,**TP**032, 053,054,061, 070,**TS**002,004, 050,051,**TV**020, 022	BC846B SMD		16006260
TL032,**TP**022	BC337-40		45001466
TL050,**TP**025, 026,031,060, 080,**TV**021	BC856B SMD		16006310
TL060	RN2417 SMD		25423180
TL061,062	RN1409 SMD		20688820
TP020	STP3NB90FP		25411640
TP058,072,081, **TR**002	BCR141 SMD		16006890
TP071,**TR**001	BCR185 SMD		16006900

DB004	1N4004		44009009
DB030,031,050, 051,070,071, **DJ**020,**DP**031, 032	BAV21		44044407
DF002,**DL**004, 005,015,030, 060,**DP**022,033, 034,035,037, 040,057,058, 070,081,**DV**070, 071	1N4148		44009209
DF010,**DL**011, 013,035,**DP**095	1N4001		16008160
DH001	BZX55C30		80444170
DI030	BA782S		20542050
DL010,012,025, 040,**DP**026,090	RGP10G		10459090
DL014	BZX55B9V1		70438220
DP001,002,003, 004	BYW27-1000		10455390
DP021,043	BZX55B16		11073430
DP023	BZX55C7V5		80444150
DP027	BZX55C27		60447870
DP030	BZX55C11		11073670
DP080	FUF4005/MUR160		16009580
DP092	MUR120		10564670
DR001	BZX55B5V1/ZPD5V1 2%		44035702
GE001	LTL307/EE LED		16010330

FI010	OFWK6270K FOS		10503340
FI030	40M4HZ		10664720
FI050	5M5HZ		10658370
QV001	12M0HZ		25418130

PP051	470R0 OHM		10260350

RB001,004	1K5 OHM 5% 0,50W		10121880
RB013	10R0 OHM 10% 0,50W		15000160
RB031,051,071	560R0 OHM 10% 0,50W		10257590
RB033,052,073, **RL**033,**RV**005, 006,010,011, 012,014,019	100R0 OHM 5% 0,25W		30943330
RF004,006	1K5 OHM 1% 0,25W		80437630
RF007	1R82 OHM 1% 0,70W		10451420
RF008	2R2 OHM 5% 0,25W	⚠	15009870
RF010	1R5 OHM 5% 0,25W	⚠	13063950
RL010	0R1 OHM 10% 0,40W	⚠	15022510
RL012	0R22 OHM 5% 0,50W	⚠	10305450
RL040	47R0 OHM 5% 0,35W	⚠	20923340
RP002	18R0 OHM 220V PTC	⚠	41398800
RP008	5R1 OHM 10% 2,50W		10472390
RP020	1R0 OHM 5% 2,50W		10383240
RP050	10M0 OHM 5% 0,70W	⚠	10074320
RP054	68K1 OHM 1% 0,70W		10147740
RS028	18R0 OHM 5% 0,30W	⚠	15009660
RS040	4R7 OHM 5% 0,35W	⚠	10226310
RS056	0R47 OHM 10% 0,40W	⚠	15022650

CB001	10N0F 3K0V		14036450
CL003	10N0F 5% 400V		10588870
CL010,012,040, **CP**089,093	330P0F 20% 1K0V		14035270
CL021	6N6F 1K6V		80304700
CL022	470P0F 10% 2K0V		25392030
CL024	440N0F 5% 250V		43352100
CP001	100N0F 20% 275V	⚠	40404090
CP003	68N0F 20% 250V		10256210
CP004	1N5F 10% 1K0V		20338740
CP005,006	4N7F 1K0V		10058740
CP008	68U0F 20% 400V		25414980
CP009	3N3F 20% 1K6V		10607950
CP050	2N2F 20% 400V	⚠	10344870
CP082	1N0F 10% 500V		10546570

R : RECYCLED PART
: PIECE RECYCLEE
: AUSTAUSCHTEILE
: RICAMBIO RICICLATO
: MODULO REPROCESADO

For any requests, please contact THOMSON multimedia after sales service area
Pour toutes précisions, contactez votre service apres vente local THOMSON multimedia
Für weitere Auskünfte, wenden Sie sich bitte an die THOMSON multimedia Kundendienste
Per precisazioni, contattare l'assistenza tecnica THOMSON multimedia
Para cualquier pregunta, por favor contactar con el responsable de zona del servicio postventa de THOMSON multimedia

07 / 2000 **35125300**
REV. N° 0 00 / 00 **00000000**

No copying, translation, modification on other use authorized. All rights reserved worldwide. • Tous droits de reproduction, de traduction, d'adaptation et d'exécution réservés pour tous les pays. • Sämtliche Urheberrechte an diesen Texten und Zeichnungen stehen uns zu. Nachdrucke, Vervielfältigungen - auch auszugsweise - nur mit unserer vorherigen Zustimmung zulässig. Alle Rechte vorbehalten. • I diritti di riproduzione, di traduzione, e esecuzione sono riservati per tutti i paesi. • Derechos de reproduccion, de traduccion, de adaptacion y de ejecucion reservados para todos los paises.

LL005	DSTLH27F	⚠	10658340
LL032	DRIVER		20936440
LP002		⚠	10654720
LP003	SMT17	⚠	10674870

OTHER PARTS
AUTRES PIECES
SONSTIGE TEILE
ALTRE PARTI
OTRAS PIEZAS

BB006	CATHODE RAY TUBE SOCKET SUPPORT TUBE CATHODIQUE BILDROEHRENFASSUNG SUPPORTO CATODICO SOPORTE T.R.C	⚠	10653850
BQ012	HEADPHONE SOCKET PRISE CASQUE KOPFHOERERBUCHSE PRESA JACK TOMA JACK		20345310
BV001	SCART SOCKET PRISE PERITEL EURO-AV-BUCHSE EUROPRESA NORMALIZZATA EUROCONECTOR		10362830
FP001	1A6T TIME-LAG FUSE 1A6T FUSIBLE TEMPORISE 1A6T SICHERUNG 1A6T FUSIBILE TEMPORIZZATO 1A6T FUSIBLE TEMPORIZADO	⚠	48064700
IR001	IC SUPPORT 2X4 SUPPORT CI 2X4 IC-FASSUNG 2X4 SUPPORTO CI 2X4 SOPORTE CI 2X4		67449100
NH001	CTT5010 UHF/VHF TUNER CTT5010 TETE UHF/VHF CTT5010 UHF/VHF TUNER CTT5010 TUNER UHF/VHF CTT5010 SINTONIZADOR UHF/VHF		20812280
SK001,002,003,004	MICROSWITCH MICRO CONTACTEUR MIKROSCHALTER MICROINTERRUTTORE MICROCONTACTOR		30011100
SP005	ON/OFF SWITCH CONTACTEUR MARCHE/ARRET EIN-AUS SCHALTER CONTATTORE ACCESO/SPENTO CONTACTOR MAECHA/PARADA	⚠	25442860

EQUIPMENT/PRESENTATION
EQUIPEMENT/PRESENTATION
AUSSTATTUNG/GEHAEUSE
PARTI VARIE
EQUIPO/PRESENTACION

A34AGT13X38 CATHODE RAY TUBE A34AGT13X38 TUBE CATHODIQUE A34AGT13X38 FARBBILDROEHRE A34AGT13X38 TUBO CATODICO A34AGT13X38 T.R.C		⚠	20786290
DEGAUSSSING COIL BOBINE DE DEMAGNETISATION ENTMAGNETISIERUNGSSPULE BOBINA DI SMAGNETIZZAZIONE BOBINA DE DESIMANTACION		⚠	20613360
POWER SUPPLY LEAD CORDON D'ALIMENTATION NETZKABEL CAVO DI ALIMENTAZIONE CABLE DE ALIMENTACION		⚠	10260830
8R OHM 3W LOUDSPEAKER 40X70 8R OHM 3W HAUT PARLEUR 40X70 8R OHM 3W LAUTSPRECHER 40X70 8R OHM 3W ALTOPARLANTE 40X70 8R OHM OHM 3W ALTAVOZ 40X70			20901550
RCT100 REMOTE CONTROL RCT100 TELECOMMANDE RCT100 FERNBEDIENUNG RCT100 TELECOMANDO RCT100 TELEMANDO			10546340
TELESCOPIC ANTENNA ANTENNE TELESCOPIQUE TELESKOPANTENNE ANTENNA TELESCOPICA ANTENA TELESCOPICA			5087882A
FRONT PANEL GY20TH FACADE GY20TH FRONTPLATTE GY20TH PANNELLO FRONTALE GY20TH PANEL FRONTAL GY20TH			25412830
REAR PANEL GY20TH DOS GY20TH RUECKWAND GY20TH PANNELLO POSTERIORE GY20TH TAPA POSTERIOR GY20TH		⚠	25416570
LED WINDOW GLACE LED LED FENSTER VETRO LED CRISTAL LED			25316500
INFRARED WINDOW GLACE INFRAROUGE INFRAROT FENSTER VETRO INFRAROSSO CRISTAL INFRARROJO			25316490
LOGO THOMSON LOGO THOMSON SCHRIFTZUG THOMSON MARCHIO THOMSON LOGOTIPO THOMSON			25332060
ON/OFF BUTTON GY20TH TOUCHE MARCHE/ARRET GY20TH EIN-AUS TASTE GY20TH TASTO ACCESO/SPENTO GY20TH TECLA MARCHA/PARADA GY20TH			25454880

BUTTON ASSY GY20TH ENSEMBLE DE TOUCHES GY20TH TASTENEINHEIT GY20TH ASSIEME TASTI GY20TH CONJUNTO DE TECLAS GY20TH		25318340
FOLDING BOX EMBALLAGE CARTON KARTON IMBALLAGGIO CARTONE EMBALAJE CARTON		25317390
FITTING UPPER CALE SUPERIEURE POLSTER OBEN DISTANZIATORE SUPERIORE CALZO SUPERIOR		25317410
FITTING DOWNER CALE INFERIEURE POLSTER UNTEN DISTANZIATORE INFERIORE CALZO INFERIOR		25317400

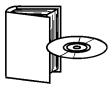

14MG15ET PARTS LIST 14MG15ET LISTE DE PIECES DETACHEES 14MG15ET ERSATZTEILLISTE 14MG15ET LISTA PARTI DI RICAMBIO 14MG15ET LISTA DE PIEZAS DE REPUESTO		35125300
TX807C/CS SERVICE MANUAL TX807C/CS DOC TECHNIQUE TX807C/CS TECHNISCHE DOKUMENTATION TX807C/CS DOCUMENTAZIONE TECNICA TX807C/CS DOCUMENTACION TECNICA		35110300
CDROM TX807 VERSION 2 CDROM TX807 VERSION 2 CDROM TX807 VERSION 2 CDROM TX807 VERSION 2 CDROM TX807 VERSION 2		35110290
TX807C/CS UM D/F/I/GB/GR/DK/NL/S/E/P/CZ/H/PL/RU/SK TX807C/CS NU D/F/I/GB/GR/DK/NL/S/E/P/CZ/H/PL/RU/SK TX807C/CS BA D/F/I/GB/GR/DK/NL/S/E/P/CZ/H/PL/RU/SK TX807C/CS IU D/F/I/GB/GR/DK/NL/S/E/P/CZ/H/PL/RU/SK TX807C/CS IU D/F/I/GB/GR/DK/NL/S/E/P/CZ/H/PL/RU/SK		50007930

The description and characteristics given here are of informative significance only, and non committal. To keep up the high quality of our products, we reserve the right to make any changes or improvement without previous notice. • Les descriptions et caractéristiques figurant sur ce document sont données à titre d'information et non d'engagement. En effet, soucieux de la qualité de nos produits, nous nous réservons le droit d'effectuer, sans préavis, toute modification ou amélioration. • Die Beschreibungen und Daten in dieser Anleitung dienen nur zur Information und sind nicht bindend. Um die Qualität unserer Produkte ständig zu verbessern, behalten wir uns das Recht auf Änderungen vor. • Le descrizioni e le caratteristiche date su questo documento sono fornite a semplice titolo informativo e senza impegno. Ci riserviamo il diritto di eseguire, senza preavviso, qualsiasi modifica o miglioramento. • Las descripciones y características que figuran en este documento se dan a título de información y no de compromiso. En efecto, en bien de la calidad de nuestros productos, nos reservamos el derecho de efectuar, sin previo aviso, cualquier modificación o mejora.

THOMSON multimedia S.A au capital de 932 655 840 € - 46, Quai Alphonse Le Gallo 92648 Boulogne Cedex FRANCE - RCS NANTERRE B 333 773 174

THOMSON MULTI MEDIA

TV

Brandt FERGUSON SABA TELEFUNKEN THOMSON

PARTS LIST
LISTE PIECES DETACHEES
ERSATZTEILLISTE
LISTA PARTI DI RICAMBIO
LISTA DE PIEZAS DE REPUESTO

FERGUSON
T7017U
Chassis TX807CS

MODULES

MAIN	**T807CF5C3022043**	**10684610**
EWM	**EWM80050**	**10679310**
VSM	**SUB VSM80000**	**10705270**

GK101	TSOP1333		25358570
IB001	TDA6107Q/N2		10659660
IF001	TDA8177		15053440
IL101	LM324AN		20679790
IP050	TLP621 GR(D4-LF2 T)	⚠	20827900
IP090	STV8130		10658850
IP095	MC7805/ACT		46007400
IR001	M22W04		10456150
IS001	TDA7263		10281150
IS100	MSP3415D-PO		10648130
IV001	TDA9554PS/N1/1/0274		10649490
ZP092	MP315	⚠	10575090
ZP094	MP32	⚠	25405650

TI030,045	DTC144EK SMD	16007030
TL031,**TP**032, 053,054,061, 070,**TS**050,100, 130,**TV**020,022	BC846B SMD	16006260
TL032,**TP**022	BC337-40	45001466
TL035	S2055N	20578760
TL050,**TP**025, 026,031,060, 080,**TV**021	BC856B SMD	16006310
TL060	RN2417 SMD	25423180
TL061,062	RN1409 SMD	20688820
TL101	IRF630FP	25453960
TP020	STP6NB90FP	25460310
TP058,072,081, **TR**002	BCR141 SMD	16006890
TP071,**TR**001	BCR185 SMD	16006900

DB004	1N4004	44009009
DB030,031,050, 051,070,071, **DJ**120,**DL**101, **DP**031,032	BAV21	44044407
DF002,003,101, 102,**DH**004, **DL**004,015,030, 060,103,116, 117,**DP**022,033, 034,035,037, 040,057,058, 070,081,**DV**070, 071,072	1N4148	44009209
DF010,**DL**011, 013,035,**DP**095	1N4001	16008160
DH001	BZX55C30	80444170
DI030,040	BA782S	20542050
DL010,012,025, 040,**DP**026,090	RGP10G	10459090
DL014	BZX55B15/ZPD15 2%	80444020
DL021	BY228	16008370
DL104,**DR**001	BZX55B5V1/ZPD5V1 2%	44035702
DL121,122	RGP15G	10272800
DL138	BAT42	16007410
DP001,002,003, 004	BYW27-1000	10455390
DP021	BZX55B16	11073430
DP023	BZX55C7V5	80444150
DP027	BZX55B30	20475340
DP030	BZX55C11	11073670
DP080	MUR460	16009650
DP092	EGP10D	20953640
GE101	LTL307/EE LED	16010330

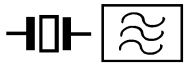

FI010	OFWK6257K FOS	10545030
FI020	OFWK9650M FOS	10545440
FI030	40M4HZ	10664720
FI050	5M74HZ	20338170
QS100	18M432HZ	10334670
QV001	12M0HZ	25418130

LL122		10636390

PL140,143	4K7 OHM	10082930
PL141	470R0 OHM	10260250
PP051	470R0 OHM	10260350

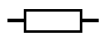

RB001,004, **RL**026	1K5 OHM 5% 0,50W		10121880
RB013	10R0 OHM 10% 0,50W		15000160
RB031,051,071	560R0 OHM 10% 0,50W		10257590
RF004,006, **RK**103	1K5 OHM 1% 0,25W		80437630
RF007	1R21 OHM 1% 0,70W		13010820
RF008	2R2 OHM 5% 0,25W	⚠	15009870
RK101	453R0 OHM 1% 0,250W		15018140
RK102	681R0 OHM 1% 0,25W		15020310
RK104	3K32 OHM 1% 0,25W		15017270
RL010	0R1 OHM 10% 0,40W	⚠	15022510
RL012	0R22 OHM 5% 0,50W	⚠	10305450
RL040	47R0 OHM 5% 0,35W	⚠	20923340
RL090	127K0 OHM 1% 0,40W		41310702
RP002	18R0 OHM 220V PTC	⚠	41398800
RP008	4R7 OHM 5% 3W		25477780
RP020	0R68 OHM 5% 2,5W		20822410
RP050	10M0 OHM 5% 0,70W	⚠	10074320
RS039,040,140	4R7 OHM 5% 0,35W	⚠	10226310
RS056	0R47 OHM 10% 0,40W	⚠	15022650
RS160	3R9 OHM 5% 0,25W	⚠	15009970

R : RECYCLED PART
: PIECE RECYCLEE
: AUSTAUSCHTEILE
: RICAMBIO RICICLATO
: MODULO REPROCESADO

For any requests, please contact THOMSON multimedia after sales service area
Pour toutes précisions, contactez votre service apres vente local THOMSON multimedia
Für weitere Auskünfte, wenden Sie sich bitte an die THOMSON multimedia Kundendienste
Per precisazioni, contattare l'assistenza tecnica THOMSON multimedia
Para cualquier pregunta, por favor contactar con el responsable de zona del servicio postventa de THOMSON multimedia

No copying, translation, modification on other use authorized. All rights reserved worldwide. • Tous droits de reproduction, de traduction, d'adaptation et d'exécution réservés pour tous les pays. • Sämtliche Urheberrechte an diesen Texten und Zeichnungen stehen uns zu. Nachdrucke, Vervielfältigungen - auch auszugsweise - nur mit unserer vorherigen Zustimmung zulässig. Alle Rechte vorbehalten. • I diritti di riproduzione, di traduzione, e esecuzione sono riservati per tutti i paesi. • Derechos de reproduccion, de traduccion, de adaptacion y de ejecucion reservados para todos los paises.

CB001	10N0F 3K0V		14036450
CB004	47N0F 5% 250V		40433080
CL003	22N0F 5% 400V		10535740
CL010,012,026, 040,**CP**089,093	330P0F 20% 1K0V		14035270
CL021	14N4F 3,5% 1K6V		10042750
CL024	440N0F 5% 250V		43352100
CL122	27N0F 5% 400V		10263540
CL123	2U7F 10% 100V		10161170
CL144	100P0F 20% 1K0V		14035280
CP001	100N0F 20% 275V	⚠	10331520
CP003	68N0F 20% 250V		10256210
CP004	1N5F 10% 1K0V		20338740
CP005,006	4N7F 1K0V		10058740
CP008	150U0F 20% 400V		13050060
CP009	3N3F 20% 1K6V		10607950
CP050	2N2F 20% 400V	⚠	10344870
CP082	1N0F 10% 500V		10546570

LL005	DSTMH30	⚠	10691490
LL026	23U0H 15%	⚠	10678590
LL032	DRIVER		20936440
LP002	25M0H	⚠	10688710
LP003	SMT	⚠	10693580

OTHER PARTS
AUTRES PIECES
SONSTIGE TEILE
ALTRE PARTI
OTRAS PIEZAS

BB005	CATHODE RAY TUBE SOCKET SUPPORT TUBE CATHODIQUE BILDROEHRENFASSUNG SUPPORTO TUBO CATODICO SOPORTE T.R.C	⚠	80298800
BJ110	CINCH SOCKET PRISE CINCH CINCH-BUCHSE PRESA CINCH TOMA CINCH		10037440
BQ112	HEADPHONE SOCKET PRISE CASQUE KOPFHOERERBUCHSE PRESA JACK TOMA JACK		20345310
BV001	SCART SOCKET PRISE PERITEL EURO-AV-BUCHSE EUROPRESA NORMALIZZATA EUROCONECTOR		10362830
CH200	ON/OFF SWITCH MSB2000 CONTACTEUR MARCHE/ARRET MSB2000 EIN-AUS SCHALTER MSB2000 CONTATTORE ACCESO/ SPENTO MSB2000 CONTACTOR MARCHA/PARADA MSB2000	⚠	10276500
CJ100	THT CABLE 600MM CABLE THT 600MM KABEL THT 600MM CAVO THT 600MM CABLE THT 600MM	⚠	10562580
CJ105	CABLE 460MM 20KV HT STRIPPED CABLE 460MM 20KV HT STRIPPED KABEL 460MM 20KV HT STRIPPED CAVO 460MM 20KV HT STRIPPED CABLE 460MM 20KV HT STRIPPED	⚠	10369650
FP001	1A6T 250V TIME-LAG FUSE 1A6T 250V FUSIBLE TEMPORISE 1A6T 250V SICHERUNG 1A6T 250V FUSIBILE TEMPORIZZATO 1A6T 250V FUSIBLE TEMPORIZADO	⚠	48064700
NH001	CTT5010 UHF/VHF TUNER CTT5010 TETE UHF/VHF CTT5010 UHF/VHF TUNER CTT5010 TUNER UHF/VHF CTT5010 SINTONIZADOR UHF/VHF		20812280
SK101,102,103, 104	MICROSWITCH MICRO CONTACTEUR MIKROSCHALTER MICROINTERRUTTORE MICROCONTACTOR		30011100

EQUIPMENT/PRESENTATION
EQUIPEMENT/PRESENTATION
AUSSTATTUNG/GEHAEUSE
PARTI VARIE
EQUIPO/PRESENTACION

FRONT PANEL FACADE FRONTPLATTE PANNELLO FRONTALE PANEL FRONTAL		25371140
REAR PANEL GY20TH DOS GY20TH RUECKWAND GY20TH PANNELLO POSTERIORE GY20TH TAPA POSTERIOR GY20TH	⚠	25450010
INFRARED WINDOW GLACE INFRAROUGE INFRAROTFENSTER VETRO INFRAROSSO CRISTAL INFRARROJO		25361990
LOGO FERGUSON LOGO FERGUSON SCHRIFTZUG FERGUSON MARCHIO FERGUSON LOGOTIPO FERGUSON		25295050
CHASSIS SUPPORT SUPPORT CHASSIS CHASSIS HALTER SUPPORTO CHASSIS SOPORTE CHASSIS		25382530
8R OHM 15W LOUDSPEAKER 60X125 8R OHM 15W HAUT PARLEUR 60X125 8R OHM 15W LAUTSPRECHER 60X125 8R OHM 15W ALTOPARLANTE 60X125 8R OHM 15W ALTAVOZ 60X125		10467060
ON/OFF BUTTON TOUCHE MARCHE/ARRET EIN-AUS TASTE TASTO ACCESO/SPENTO TECLA MARCHA/PARADA		25309090
BUTTON ASSY ENSEMBLE DE TOUCHES TASTENEINHEIT ASSIEME TASTI CONJUNTO DE TECLAS		25312630
POWER SUPPLY LEAD CORDON D'ALIMENTZATION NETZKABEL CAVO DI ALIMENTAZIONE CABLE DE ALIMENTACION	⚠	25420360
CORD STOPPER ATTACHE CORDON SECTEUR ZUGENTLASTUNG BRIDA CORDONE DI ALIMENTAZIONE SUJECION CABLE DE ALIMENTACION		25071420
A66EHJ13X15 CATHODE RAY TUBE A66EHJ13X15 TUBE CATHODIQUE A66EHJ13X15 FARBBILDROEHRE A66EHJ13X15 TUBO CATODICO A66EHJ13X15 T.R.C	⚠	10715790
DEGAUSSING COIL BOBINE DE DEMAGNETISATION ENTMAGNETISIERUNGSSPULE BOBINA DI SMAGNETTIZZAZIONE BOBINA DE DESIMANTACION	⚠	47320183
RCTMB100 REMOTE CONTROL RCTMB100 TELECOMMANDE RCTMB100 FERNBEDIENUNG RCTMB100 TELECOMANDO RCTMB100 TELEMANDO		20879230
FOLDING BOX EMBALLAGE CARTON KARTON IMBALLAGGIO CARTONE EMBALAJE CARTON		25354290
FITTING DOWNER CALE INFERIEURE POLSTER UNTEN DISTANZIATORE INFERIORE CALZO INFERIOR		25325150
FITTING UPPER CALE SUPERIEURE POLSTER OBEN DISTANZIATORE SUPERIORE CALZO SUPERIOR		25325170

MAINTENANCE TOOLS
MAINTENANCE
WERKZEUG FUER DAS GERAET
UTENSILI DI MANUTENZIONE
MANTENIMIENTO

TX807C/CS 110D POWER SUPPLY REPAIR KIT TX807C/CS 110D KIT DE MAINTENANCE ALIMENTATION TX807C/CS 110D REPARATURSET NETZTEIL TX807C/CS 110D KIT PER RIPARARE L'ALIMENTAZIONE TX807C/CS 110D KIT DE REPARACION DE L'ALIMENTACION	35135370

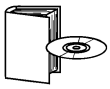

T7017U PARTS LIST 35151780
T7017U LISTE DE PIECES DETACHEES
T7017U ERSATZTEILLISTE
T7017U LISTA PARTI DI RICAMBIO
T7017U LISTA DE PIEZAS DE REPUESTO

TX807C/CS SERVICE MANUAL 35110300
TX807C/CS DOC TECHNIQUE
TX807C/CS TECHNISCHE DOKUMENTATION
TX807C/CS DOCUMENTAZIONE TECNICA
TX807C/CS DOCUMENTACION TECNICA

TX807C/CS SERVICE MANUAL SUPPLEMENT 35141950
TX807C/CS DOC TECHNIQUE ADDITIF
TX807C/CS SECHNISCHE DOKUMENTATION ZUSAT
TX807C/CS DOCUMENTAZIONE ADDITIVO
TX807C/CS DOCUMENTACION ADITIVO

CDROM TX807 VERSION 2 35110290
CDROM TX807 VERSION 2
CDROM TX807 VERSION 2
CDROM TX807 VERSION 2
CDROM TX807 VERSION 2

TX807C/CS UM 10 LANGUAGES 50011430
TX807C/CS NU 10 LANGUAGES
TX807C/CS BA 10 LANGUAGES
TX807C/CS IU 10 LANGUAGES
TX807C/CS IU 10 LANGUAGES

OPTION
OPTION
OPTION
OPZIONE
OPCION

ST7040SB TV STAND 35151900
ST7040SB MEUBLE TV
ST7040SB TV-SCHRANK
ST7040SB MOBILE TV
ST7040SB MUEBLE TV

The description and characteristics given here are of informative significance only, and non committal. To keep up the high quality of our products, we reserve the right to make any changes or improvement without previous notice. • Les descriptions et caractéristiques figurant sur ce document sont données à titre d'information et non d'engagement. En effet, soucieux de la qualité de nos produits, nous nous réservons le droit d'effectuer, sans préavis, toute modification ou amélioration. • Die Beschreibungen und Daten in dieser Anleitung dienen nur zur Information und sind nicht bindend. Um die Qualität unserer Produkte ständig zu verbessern, behalten wir uns das Recht auf Änderungen vor. • Le descrizioni e le caratteristiche date su questo documento sono fornite a semplice titolo informativo e senza impegno. Ci riserviamo il diritto di eseguire, senza preavviso, qualsiasi modifica o miglioramento. • Las descripciones y características que figuran en este documento se dan a título de información y no de compromiso. En efecto, en bien de la calidad de nuestros productos, nos reservamos el derecho de efectuar, sin previo aviso, cualquier modificación o mejora.

THOMSON multimedia S.A au capital de 994 175 655 € - 46, Quai Alphonse Le Gallo 92648 Boulogne Cedex FRANCE - RCS NANTERRE B 333 773 174

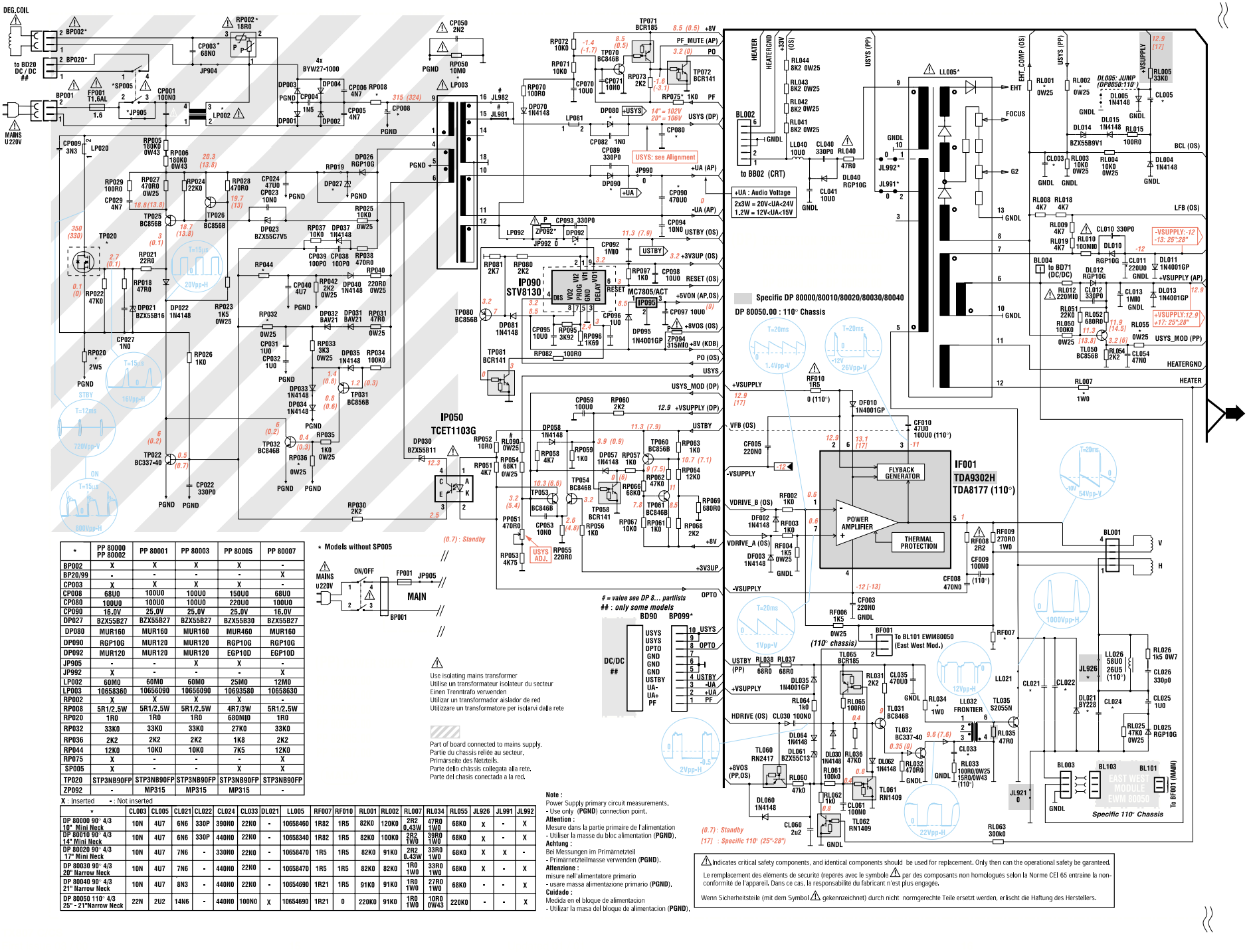

*	PP 80000 PP 80002	PP 80001	PP 80003	PP 80005	PP 80007
BP002	X	X	X	X	-
BP20/99	-	-	-	-	X
CP003	X	X	X	X	-
CP008	68U0	100U0	100U0	150U0	68U0
CP080	100U0	100U0	100U0	220U0	100U0
CP090	16.0V	25.0V	25.0V	25.0V	16.0V
DP027	BZX55B27	BZX55B27	BZX55B27	BZX55B30	BZX55B27
DP080	MUR160	MUR160	MUR160	MUR460	MUR160
DP090	RGP10G	MUR120	MUR120	RGP10G	RGP10G
DP092	MUR120	MUR120	MUR120	EGP10D	EGP10D
JP905	-	-	X	X	-
JP992	X	-	-	-	X
LP002	60M0	60M0	60M0	25M0	12M0
LP003	10658360	10656090	10656090	10693580	10658630
RP002	X	X	X	X	-
RP008	5R1/2.5W	5R1/2.5W	5R1/2.5W	4R7/3W	5R1/2.5W
RP020	1R0	1R0	1R0	680MI0	1R0
RP032	33K0	33K0	33K0	27K0	33K0
RP036	2K2	2K2	2K2	1K8	2K2
RP044	12K0	10K0	10K0	7K5	12K0
RP075	X	-	-	-	X
SP005	X	-	-	X	X
TP020	STP3NB90FP	STP3NB90FP	STP3NB90FP	STP3NB90FP	STP3NB90FP
ZP092	-	MP315	MP315	MP315	-

X : Inserted - : Not inserted

*	CL003	CL005	CL021	CL022	CL024	CL033	DL021	LL005	RF007	RF010	RL001	RL002	RL007	RL034	RL055	JL926	JL991	JL992
DP 80000 90° 4/3 10" Mini Neck	10N	4U7	6N6	330P	390N0	22N0	-	10658460	1R82	1R5	82K0	120K0	2R2 0.43W	47R0 1W0	68K0	X	-	X
DP 80010 90° 4/3 14" Mini Neck	10N	4U7	6N6	330P	440N0	22N0	-	10658340	1R82	1R5	82K0	100K0	2R2 1W0	39R0 1W0	68K0	X	-	X
DP 80020 90° 4/3 17" Mini Neck	10N	4U7	7N6	-	330N0	22N0	-	10658470	1R5	1R5	82K0	91K0	2R2 0.43W	33R0 1W0	68K0	X	X	-
DP 80030 90° 4/3 20" Narrow Neck	10N	4U7	7N6	-	440N0	22N0	-	10658470	1R5	1R5	82K0	82K0	1R0 1W0	33R0 1W0	68K0	X	-	X
DP 80040 90° 4/3 21" Narrow Neck	10N	4U7	8N3	-	440N0	22N0	-	10654690	1R21	1R5	91K0	91K0	1R0 1W0	27R0 1W0	68K0	-	-	X
DP 80050 110° 4/3 25" - 21"Narrow Neck	22N	2U2	14N6	-	440N0	100N0	X	10654690	1R21	0	220K0	91K0	1R0 1W0	10R0 0W43	220K0	-	-	X

Note :
Power Supply primary circuit measurements.
- Use only (PGND) connection point.

Attention :
Mesure dans la partie primaire de l'alimentation
- Utiliser la masse du bloc alimentation (PGND).

Achtung :
Bei Messungen im Primärnetzteil
- Primärnetzteilmasse verwenden (PGND).

Attenzione :
misure nell'alimentatore primario
- usare massa alimentazione primario (PGND).

Cuidado :
Medida en el bloque de alimentacion
- Utilizar la masa del bloque de alimentacion (PGND).

⚠ Indicates critical safety components, and identical components should be used for replacement. Only then can the operational safety be garanteed.

Le remplacement des éléments de sécurité (repérés avec le symbole ⚠ par des composants non homologués selon la Norme CEI 65 entraine la non-conformité de l'appareil. Dans ce cas, la responsabilité du fabricant n'est plus engagée.

Wenn Sicherheitsteile (mit dem Symbol ⚠ gekennzeichnet) durch nicht normgerechte Teile ersetzt werden, erlischt die Haftung des Herstellers.

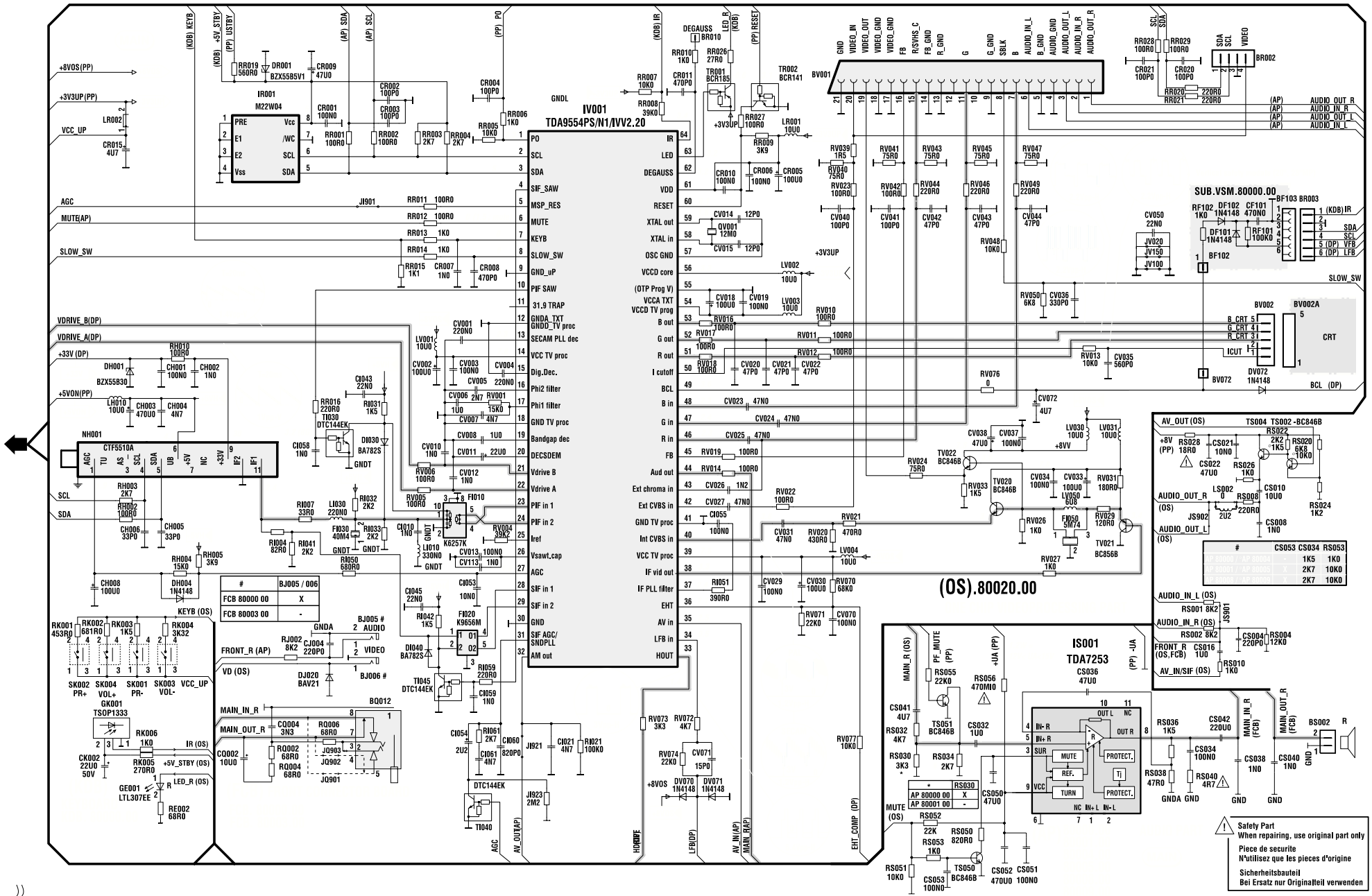
IV001
TDA9554PS/N1/IVV2.20
IR001
M22W04
IS001
TDA7253
SUB.VSM.80000.00
(OS).80020.00
NH001
CTF5510A
BV001
BV002
BV002A
CRT
BR002
BR003
BF102
BF103
KEYB (OS)
GK001
TSOP1333
BQ012
JQ901
JQ903
JQ902
BJ005 # AUDIO
BJ006 # VIDEO
DJ020
BAV21
FRONT_R (AP)
VD (OS)
MAIN_IN_R
MAIN_OUT_R
AV_OUT(OS)
AUDIO_OUT_R (OS)
AUDIO_OUT_L (OS)
AUDIO_IN_L (OS)
AUDIO_IN_R (OS)
FRONT_R (OS.FCB)
AV_IN/SIF (OS)
MAIN_R (OS)
MUTE (OS)
PF_MUTE (PP)
+UA (PP)
-UA (PP)
+8VOS(PP)
+3V3UP(PP)
VCC_UP
+5VON(PP)
+33V (DP)
+8V (PP)
+8VV
VDRIVE_B(DP)
VDRIVE_A(DP)
AGC
MUTE(AP)
SLOW_SW
SCL
SDA
IR (OS)
+5V_STBY (OS)
LED_R (OS)
GE001
LTL307EE
RE002
68R0
RK005
270R0
RK006
1K0
CK002
22U0
50V
DEGAUSS
LED_R (KDB)
(PP) RESET
(KDB) IR
(KDB) KEYB
(KDB) +5V_STBY
(PP) USTBY
(AP) SDA
(AP) SCL
(PP) PO
GNDL
GNDA
GNDT
+3V3UP
+8VOS
HOUT
HFOUT
LFB(DP)
AV_IN(AP)
MAIN_RAP
AV_OUT(AP)
AGC
EHT_COMP (DP)
Safety Part
When repairing, use original part only
Piece de securite
N'utilisez que les pieces d'origine
Sicherheitsbauteil
Bei Ersatz nur Originalteil verwenden

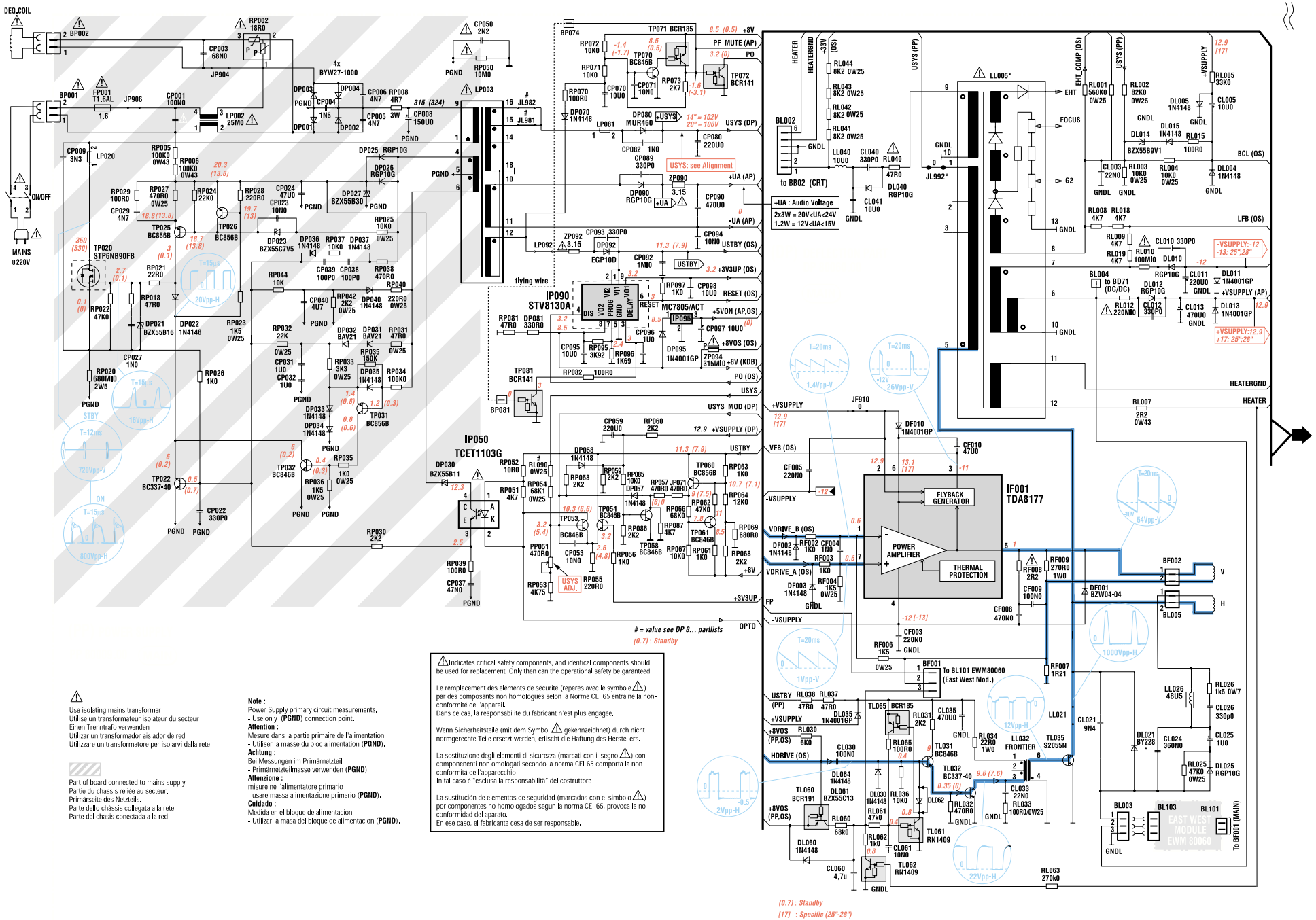

⚠ Use isolating mains transformer
Utilise un transformateur isolateur du secteur
Einen Trenntrafo verwenden
Utilizar un transformador aislador de red
Utilizzare un transformatore per isolarvi dalla rete

Part of board connected to mains supply.
Partie du chassis reliée au secteur.
Primärseite des Netzteils.
Parte dello chàssis collegata alla rete.
Parte del chasis conectada a la red.

Note :
Power Supply primary circuit measurements.
- Use only (**PGND**) connection point.

Attention :
Mesure dans la partie primaire de l'alimentation
- Utiliser la masse du bloc alimentation (**PGND**).

Achtung :
Bei Messungen im Primärnetzteil
- Primärnetzteilmasse verwenden (**PGND**).

Attenzione :
misure nell'alimentare primario
- usare massa alimentazione primario (**PGND**).

Cuidado :
Medida en el bloque de alimentacion
- Utilizar la masa del bloque de alimentacion (**PGND**).

⚠ Indicates critical safety components, and identical components should be used for replacement. Only then can the operational safety be garanteed.

Le remplacement des éléments de sécurité (repérés avec le symbole ⚠) par des composants non homologués selon la Norme CEI 65 entraine la non-conformité de l'appareil.
Dans ce cas, la responsabilité du fabricant n'est plus engagée.

Wenn Sicherheitsteile (mit dem Symbol ⚠ gekennzeichnet) durch nicht normgerechte Teile ersetzt werden, erlischt die Haftung des Herstellers.

La sostituzione degli elementi di sicurezza (marcati con il segno ⚠) con componenenti non omologati secondo la norma CEI 65 comporta la non conformità dell'apparecchio,
In tal caso è "esclusa la responsabilita" del costruttore.

La sustitución de elementos de seguridad (marcados con el simbolo ⚠) por componentes no homologados segun la norma CEI 65, provoca la no conformidad del aparato.
En ese caso, el fabricante cesa de ser responsable.

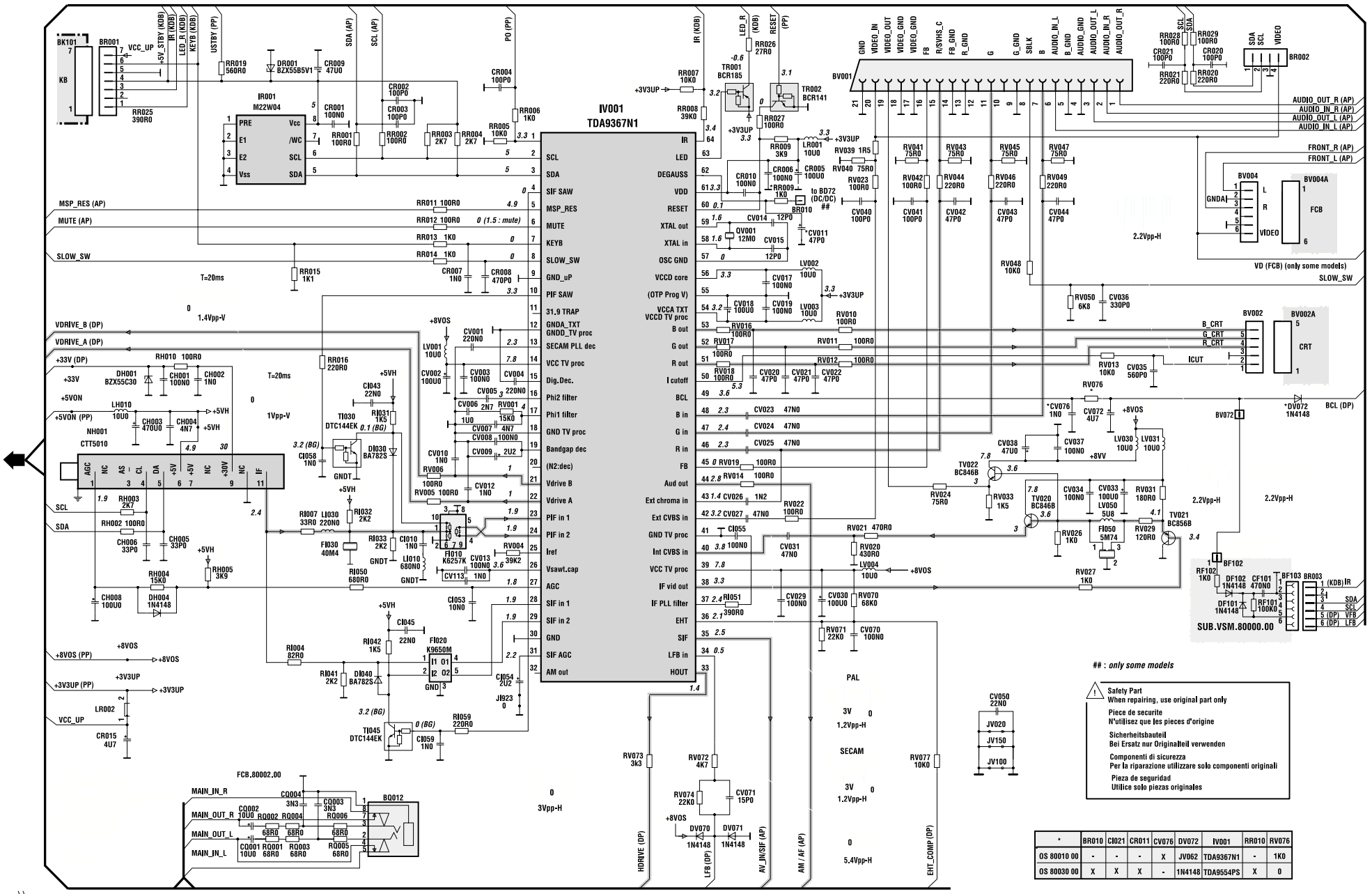

*	BR010	CI021	CR011	CV076	DV072	IV001	RR010	RV076
OS 80010 00	-	-	-	X	JV062	TDA9367N1	-	1K0
OS 80030 00	X	X	X	-	1N4148	TDA9554PS	X	0

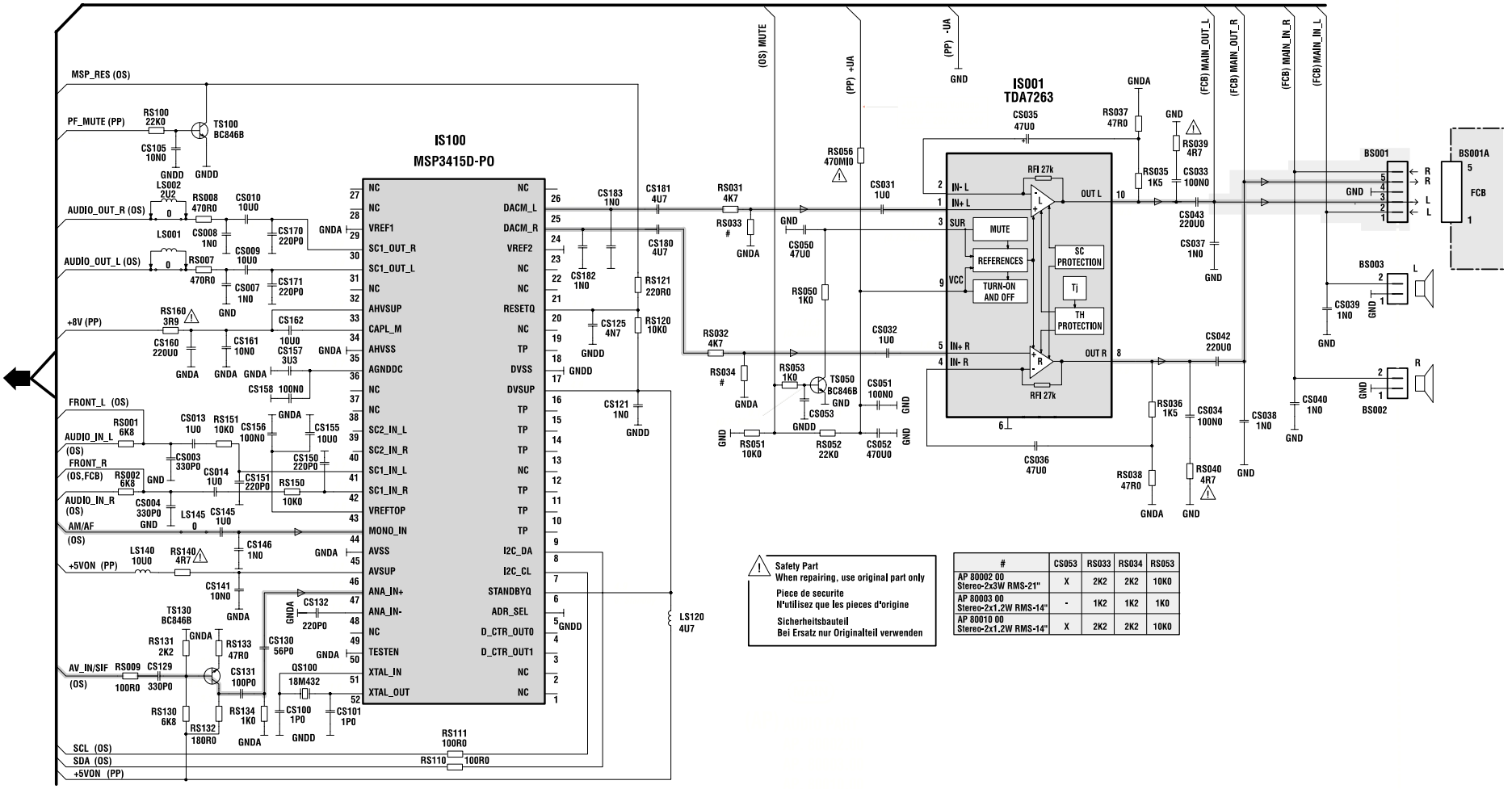

#	CS053	RS033	RS034	RS053
AP 80002 00 Stereo-2x3W RMS-21"	X	2K2	2K2	10K0
AP 80003 00 Stereo-2x1.2W RMS-14"	-	1K2	1K2	1K0
AP 80010 00 Stereo-2x1.2W RMS-14"	X	2K2	2K2	10K0

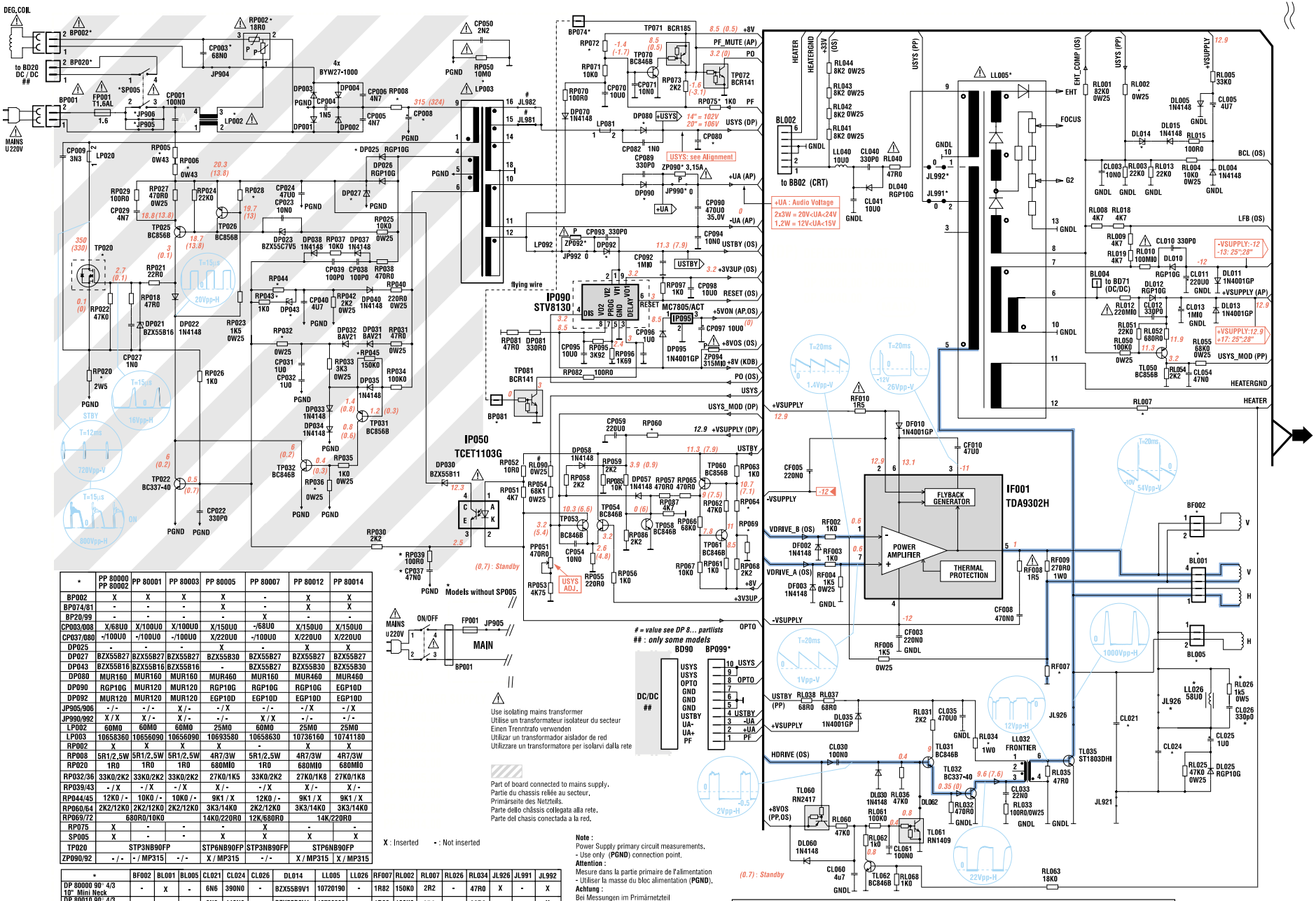

*	PP 80000 PP 80002	PP 80001	PP 80003	PP 80005	PP 80007	PP 80012	PP 80014
BP002	X	X	X	X	-	X	X
BP074/81	-	-	-	X	X	X	X
BP20/99	-	-	-	-	X	-	-
CP003/008	X/68U0	X/100U0	X/100U0	X/150U0	-/68U0	X/150U0	X/150U0
CP037/080	-/100U0	-/100U0	-/100U0	X/220U0	-/100U0	X/220U0	X/220U0
DP025	-	-	-	X	-	X	X
DP027	BZX55B27	BZX55B27	BZX55B27	BZX55B30	BZX55B27	BZX55B27	BZX55B27
DP043	BZX55B16	BZX55B16	BZX55B16	-	BZX55B27	BZX55B30	BZX55B30
DP080	MUR160	MUR160	MUR160	MUR460	MUR160	MUR460	MUR460
DP090	RGP10G	MUR120	MUR120	RGP10G	RGP10G	RGP10G	EGP10D
DP092	MUR120	MUR120	MUR120	EGP10D	EGP10D	EGP10D	EGP10D
JP905/906	- / -	- / -	X / -	- / X	- / -	- / X	- / X
JP990/992	X / X	X / -	X / -	- / -	X / X	- / -	- / -
LP002	60M0	60M0	60M0	25M0	60M0	25M0	25M0
LP003	10658360	10656090	10656090	10693580	10658630	10736160	10741180
RP002	X	X	X	X	-	X	X
RP008	5R1/2,5W	5R1/2.5W	5R1/2.5W	4R7/3W	5R1/2.5W	4R7/3W	4R7/3W
RP020	1R0	1R0	1R0	680MI0	1R0	680MI0	680MI0
RP032/36	33K0/2K2	33K0/2K2	33K0/2K2	27K0/1K5	33K0/2K2	27K0/1K8	27K0/1K8
RP039/43	- / X	- / X	- / X	X / -	- / X	X / -	X / -
RP044/45	12K0 / -	10K0 / -	10K0 / -	9K1 / X	12K0 / -	9K1 / X	9K1 / X
RP060/64	2K2/12K0	2K2/12K0	2K2/12K0	3K3/14K0	2K2/12K0	3K3/14K0	3K3/14K0
RP069/72	680R0/10K0			14K0/220R0	12K/680R0	14K/220R0	
RP075	X	-	-	-	X	-	-
SP005	X	-	-	X	X	X	X
TP020	STP3NB90FP			STP6NB90FP	STP3NB90FP	STP6NB90FP	
ZP090/92	- / -	- / MP315	- / -	X / MP315	- / -	X / MP315	X / MP315

X : Inserted - : Not inserted

*	BF002	BL001	BL005	CL021	CL024	CL026	DL014	LL005	LL026	RF007	RL002	RL007	RL026	RL034	JL926	JL991	JL992
DP 80000 90° 4/3 10" Mini Neck	-	X	-	6N6	390N0	-	BZX55B9V1	10720190	-	1R82	150K0	2R2	-	47R0	X	-	X
DP 80010 90° 4/3 14" Mini Neck	-	X	-	6N6	440N0	-	BZX55B9V1	10720200	-	1R82	100K0	2R2	-	39R0	X	-	X
DP 80020 90° 4/3 17" Mini Neck	-	X	-	7N6	390N0	-	BZX55B9V1	10658470	-	1R5	91K0	2R2	-	33R0	X	X	-
DP 80030 90° 4/3 20" Narrow Neck	X	-	X	7N6	560N0	-	BZX55B11	10658470	-	1R5	82K0	1R0	-	33R0	X	-	X
DP 80040 90° 4/3 21" Narrow Neck	X	-	X	8N3	440N0	X	BZX55B11	10654690	X	1R21	91K0	1R0	X	22R0	-	-	X

Note :
Power Supply primary circuit measurements.
- Use only (**PGND**) connection point.

Attention :
Mesure dans la partie primaire de l'alimentation
- Utiliser la masse du bloc alimentation (**PGND**).

Achtung :
Bei Messungen im Primärnetzteil
- Primärnetzteilmasse verwenden (**PGND**).

Attenzione :
misure nell'alimentatore primario
- usare massa alimentazione primario (**PGND**).

Cuidado :
Medida en el bloque de alimentacion
- Utilizar la masa del bloque de alimentacion (**PGND**).

⚠ Indicates critical safety components, and identical components should be used for replacement. Only then can the operational safety be garanteed.

Le remplacement des éléments de sécurité (repérés avec le symbole ⚠ par des composants non homologués selon la Norme CEI 65 entraine la non-conformité de l'appareil. Dans ce cas, la responsabilité du fabricant n'est plus engagée.

Wenn Sicherheitsteile (mit dem Symbol ⚠ gekennzeichnet) durch nicht normgerechte Teile ersetzt werden, erlischt die Haftung des Herstellers.

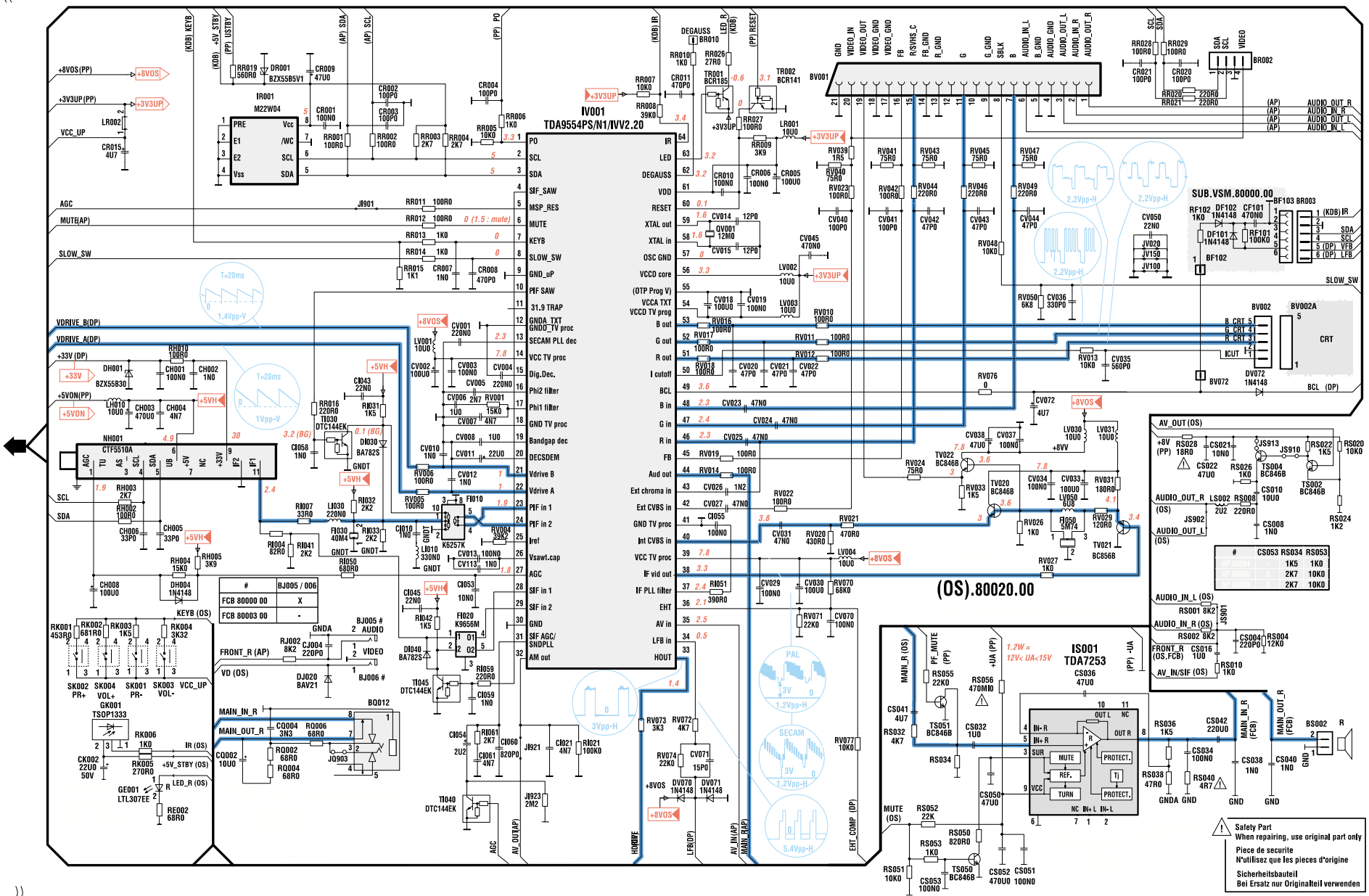
IV001
TDA9554PS/N1/IVV2.20
IR001
M22W04
NH001
CTF5510A
IS001
TDA7253
(OS).80020.00
SUB.VSM.80000.00
BV001
BV002
BV002A
CRT
BR002
BR010
BR003
BF102
BF103
BQ012
BJ005 / 006
FCB 80000 00 X
FCB 80003 00 -
Safety Part
When repairing, use original part only
Piece de securite
N'utilisez que les pieces d'origine
Sicherheitsbauteil
Bei Ersatz nur Originalteil verwenden

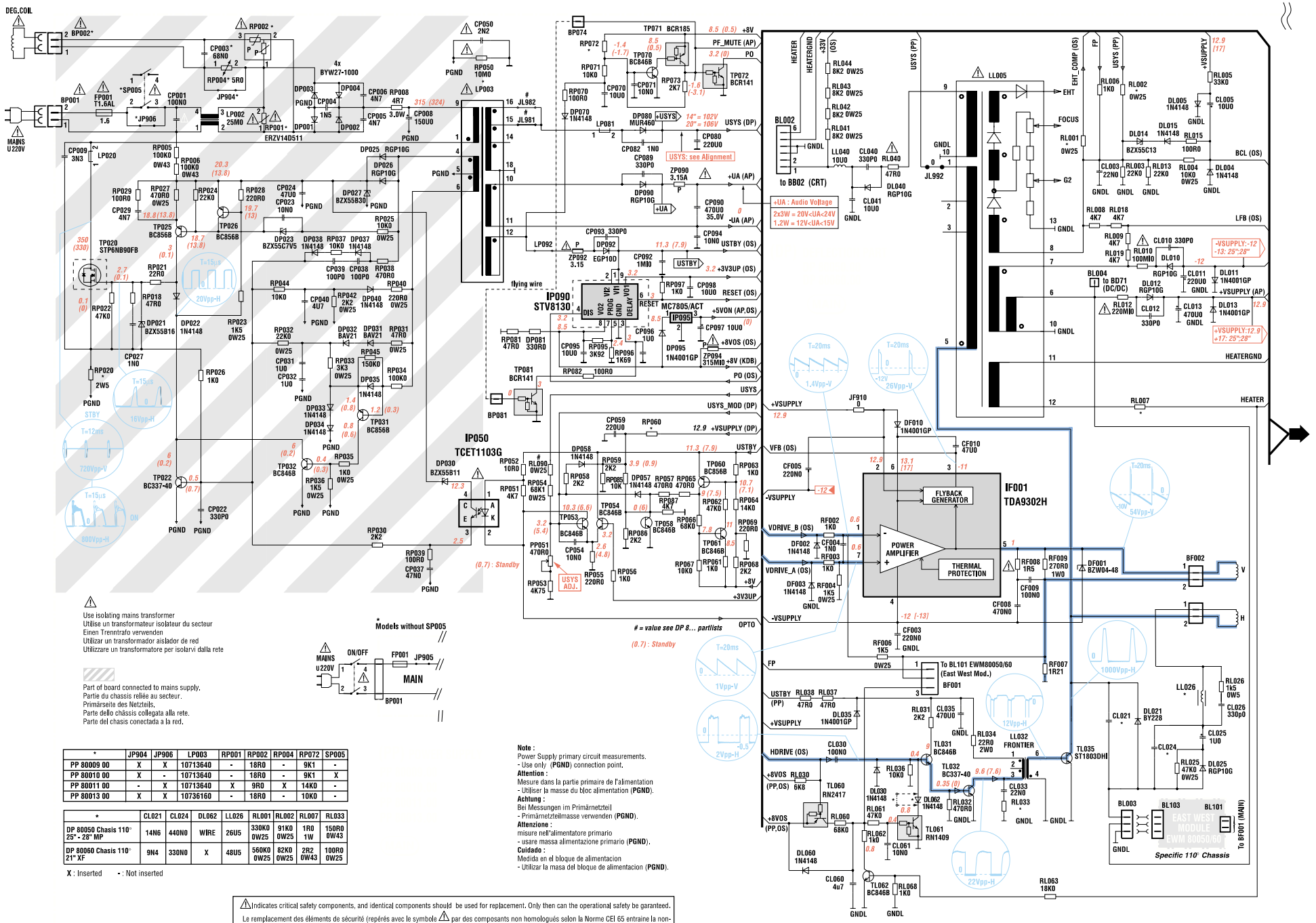

*	JP904	JP906	LP003	RP001	RP002	RP004	RP072	SP005
PP 80009 00	X	X	10713640	-	18R0	-	9K1	-
PP 80010 00	X	-	10713640	-	18R0	-	9K1	X
PP 80011 00	-	X	10713640	X	9R0	X	14K0	-
PP 80013 00	X	X	10736160	-	18R0	-	10K0	-

*	CL021	CL024	DL062	LL026	RL001	RL002	RL007	RL033
DP 80050 Chasis 110° 25" - 28" MP	14N6	440N0	WIRE	26U5	330K0 0W25	91K0 0W25	1R0 1W	150R0 0W43
DP 80060 Chasis 110° 21" XF	9N4	330N0	X	48U5	560K0 0W25	82K0 0W25	2R2 0W43	100R0 0W25

X : Inserted - : Not inserted

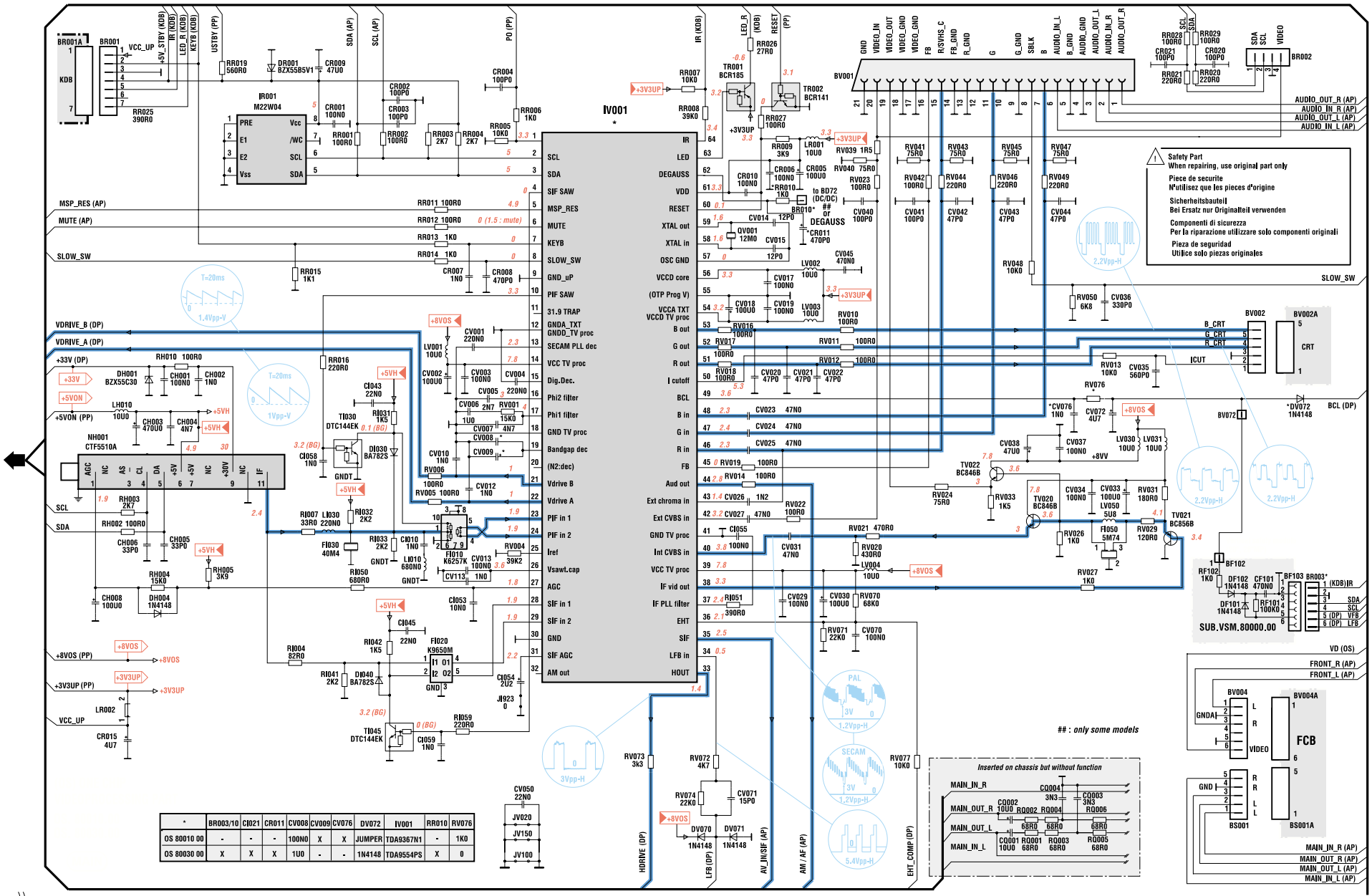

*	BR003/10	CI021	CR011	CV008	CV009	CV076	DV072	IV001	RR010	RV076
OS 80010 00	-	-	-	100N0	X	X	JUMPER	TDA9367N1	-	1K0
OS 80030 00	X	X	X	1U0	-	-	1N4148	TDA9554PS	X	0

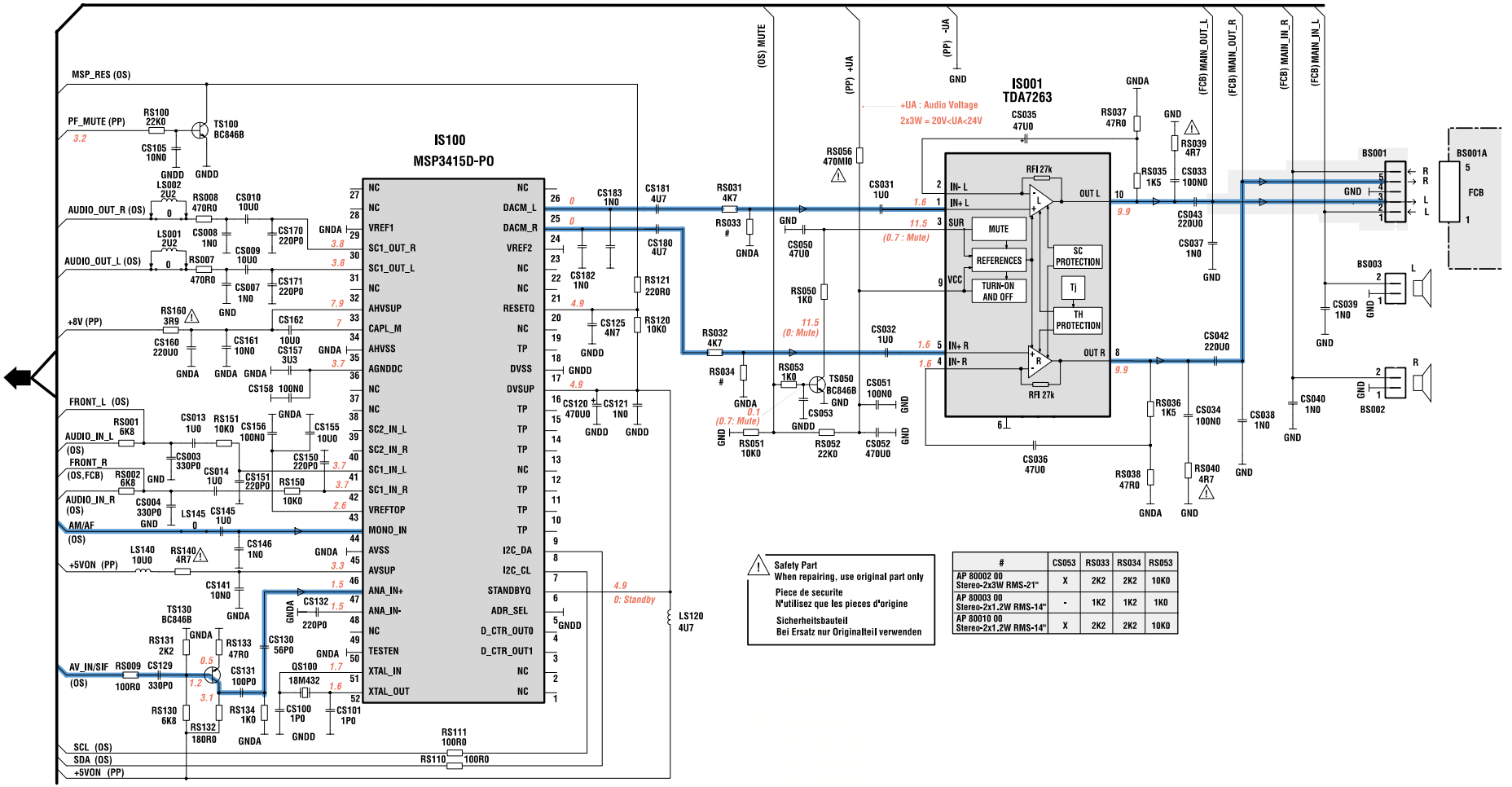

#	CS053	RS033	RS034	RS053
AP 80002 00 Stereo-2x3W RMS-21"	X	2K2	2K2	10K0
AP 80003 00 Stereo-2x1.2W RMS-14"	-	1K2	1K2	1K0
AP 80010 00 Stereo-2x1.2W RMS-14"	X	2K2	2K2	10K0

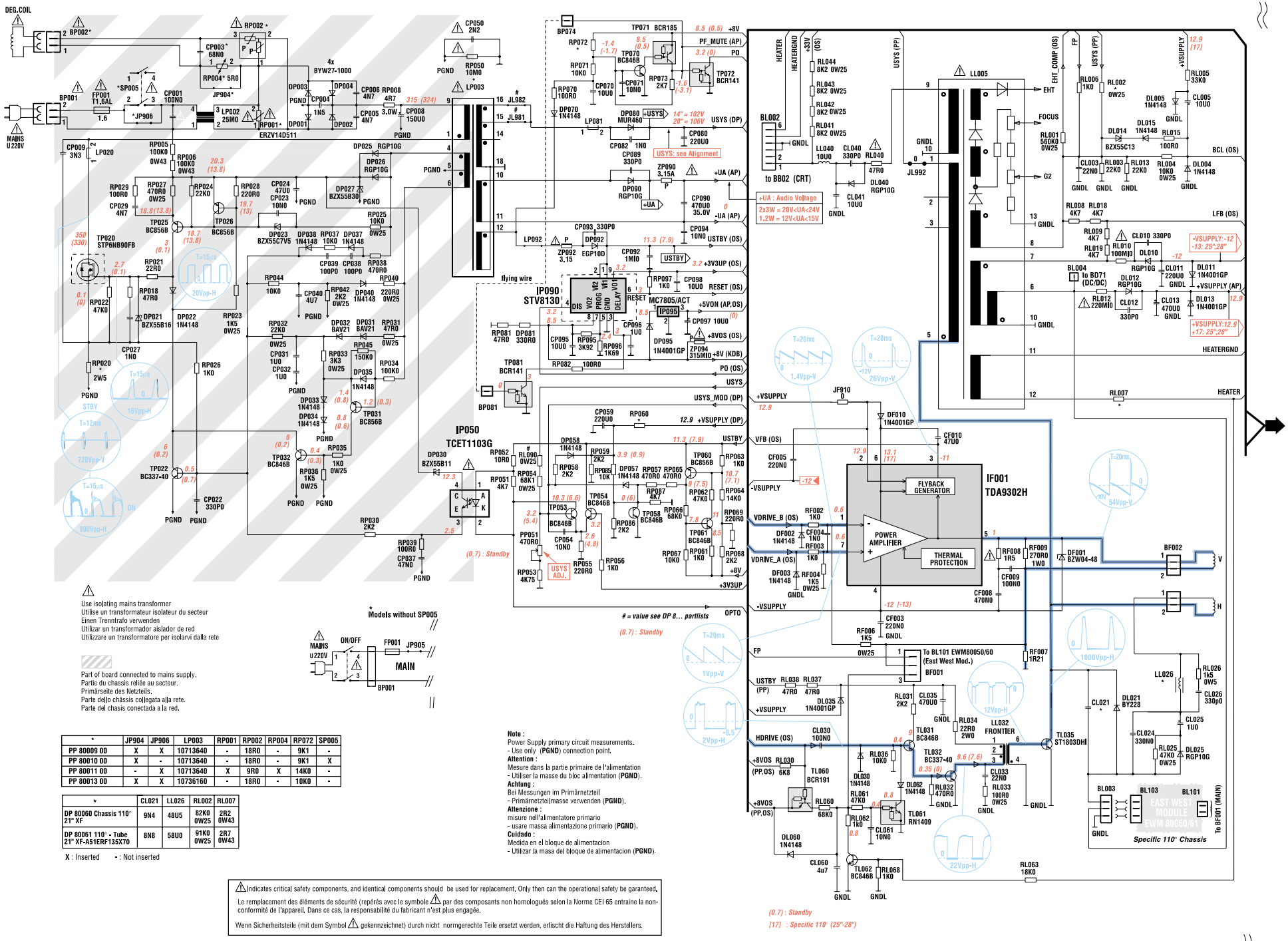

*	JP904	JP906	LP003	RP001	RP002	RP004	RP072	SP005
PP 80009 00	X	X	10713640	-	18R0	-	9K1	-
PP 80010 00	X	-	10713640	-	18R0	-	9K1	X
PP 80011 00	-	X	10713640	X	9R0	X	14K0	-
PP 80013 00	X	X	10736160	-	18R0	-	10K0	-

*	CL021	LL026	RL002	RL007
DP 80060 Chassis 110° 21" XF	9N4	48U5	82K0 0W25	2R2 0W43
DP 80061 110° - Tube 21" XF-A51ERF135X70	8N8	58U0	91K0 0W25	2R7 0W43

X : Inserted - : Not inserted

Note :
Power Supply primary circuit measurements.
- Use only (PGND) connection point.

Attention :
Mesure dans la partie primaire de l'alimentation
- Utiliser la masse du bloc alimentation (PGND).

Achtung :
Bei Messungen im Primärnetzteil
- Primärnetzteilmasse verwenden (PGND).

Attenzione :
misure nell'alimentatore primario
- usare massa alimentazione primario (PGND).

Cuidado :
Medida en el bloque de alimentacion
- Utilizar la masa del bloque de alimentacion (PGND).

⚠ Indicates critical safety components, and identical components should be used for replacement. Only then can the operational safety be garanteed.

Le remplacement des éléments de sécurité (repérés avec le symbole ⚠ par des composants non homologués selon la Norme CEI 65 entraine la non-conformité de l'appareil. Dans ce cas, la responsabilité du fabricant n'est plus engagée.

Wenn Sicherheitsteile (mit dem Symbol ⚠ gekennzeichnet) durch nicht normgerechte Teile ersetzt werden, erlischt die Haftung des Herstellers.

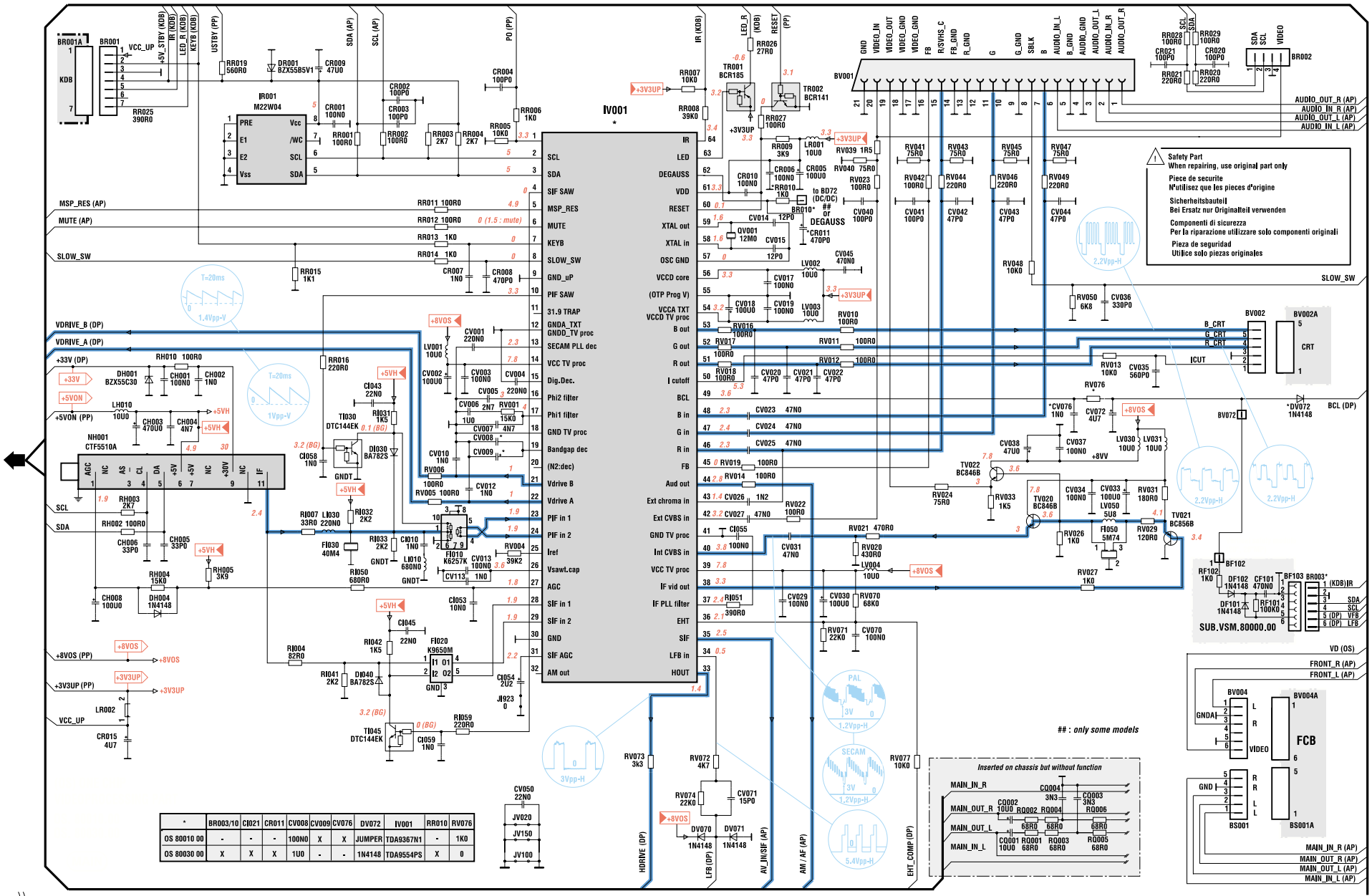

*	BR003/10	CI021	CR011	CV008	CV009	CV076	DV072	IV001	RR010	RV076
OS 80010 00	-	-	-	100N0	X	X	JUMPER	TDA9367N1	-	1K0
OS 80030 00	X	X	X	1U0	-	-	1N4148	TDA9554PS	X	0

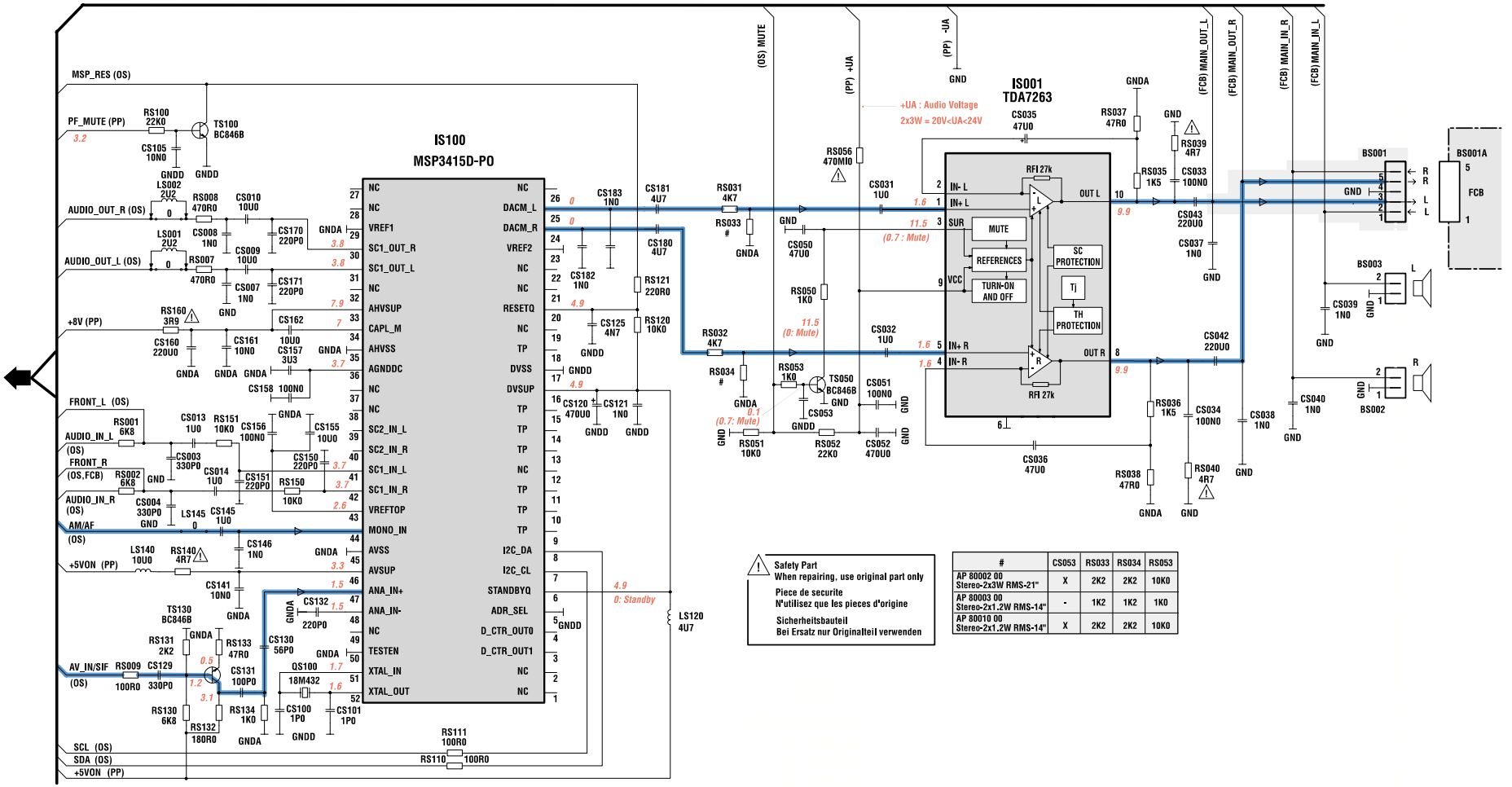

#	CS053	RS033	RS034	RS053
AP 80002 00 Stereo-2x3W RMS-21"	X	2K2	2K2	10K0
AP 80003 00 Stereo-2x1.2W RMS-14"	-	1K2	1K2	1K0
AP 80010 00 Stereo-2x1.2W RMS-14"	X	2K2	2K2	10K0

TUNER CTT5000

(FREQUENCY SYNTHESIS - SYNTHESE DE FREQUENCE - FREQUENZSYNTHESE - SINTESI DI FREQUENZA - SINTESIS DE FRECUENCIA)

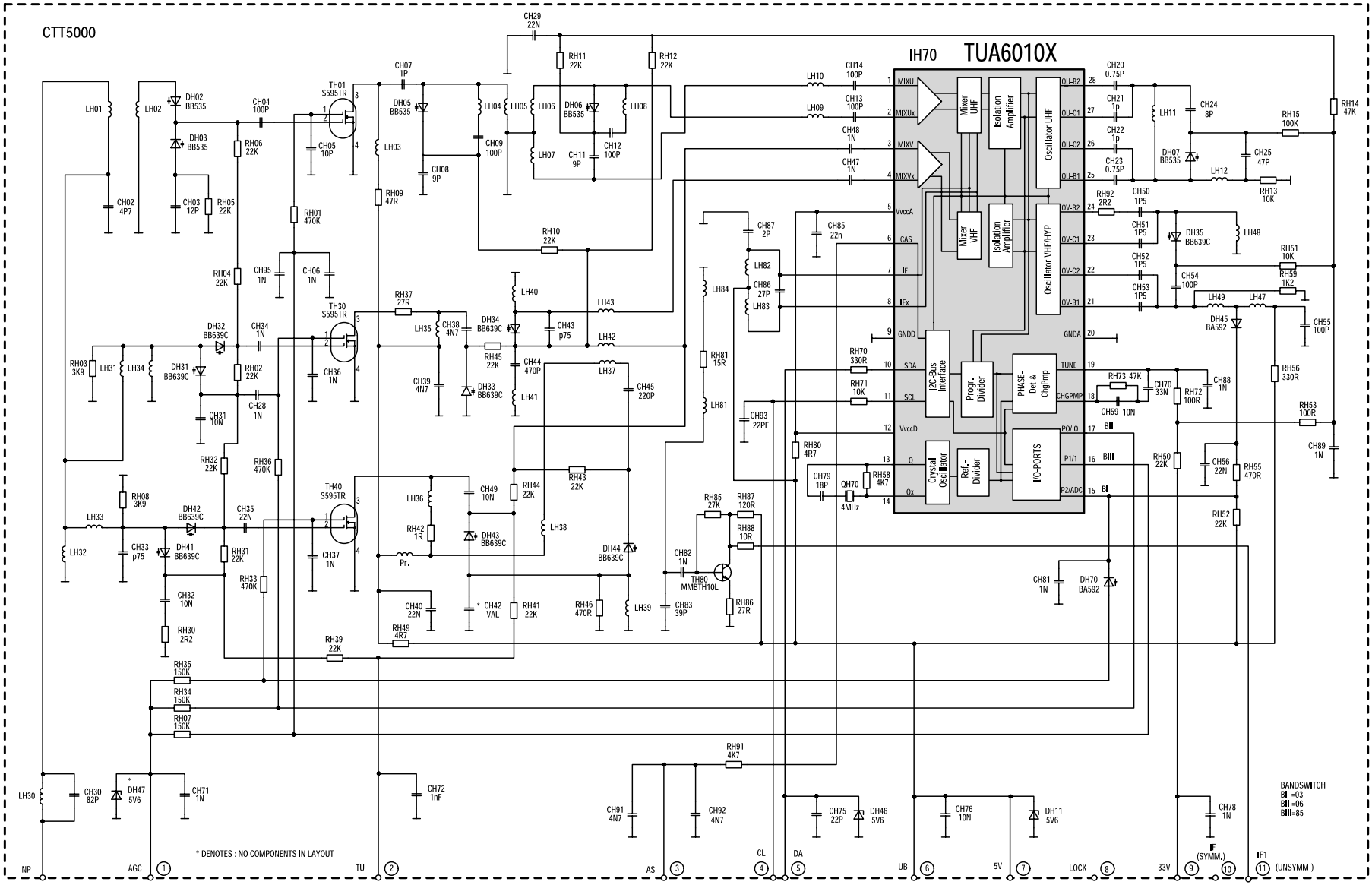

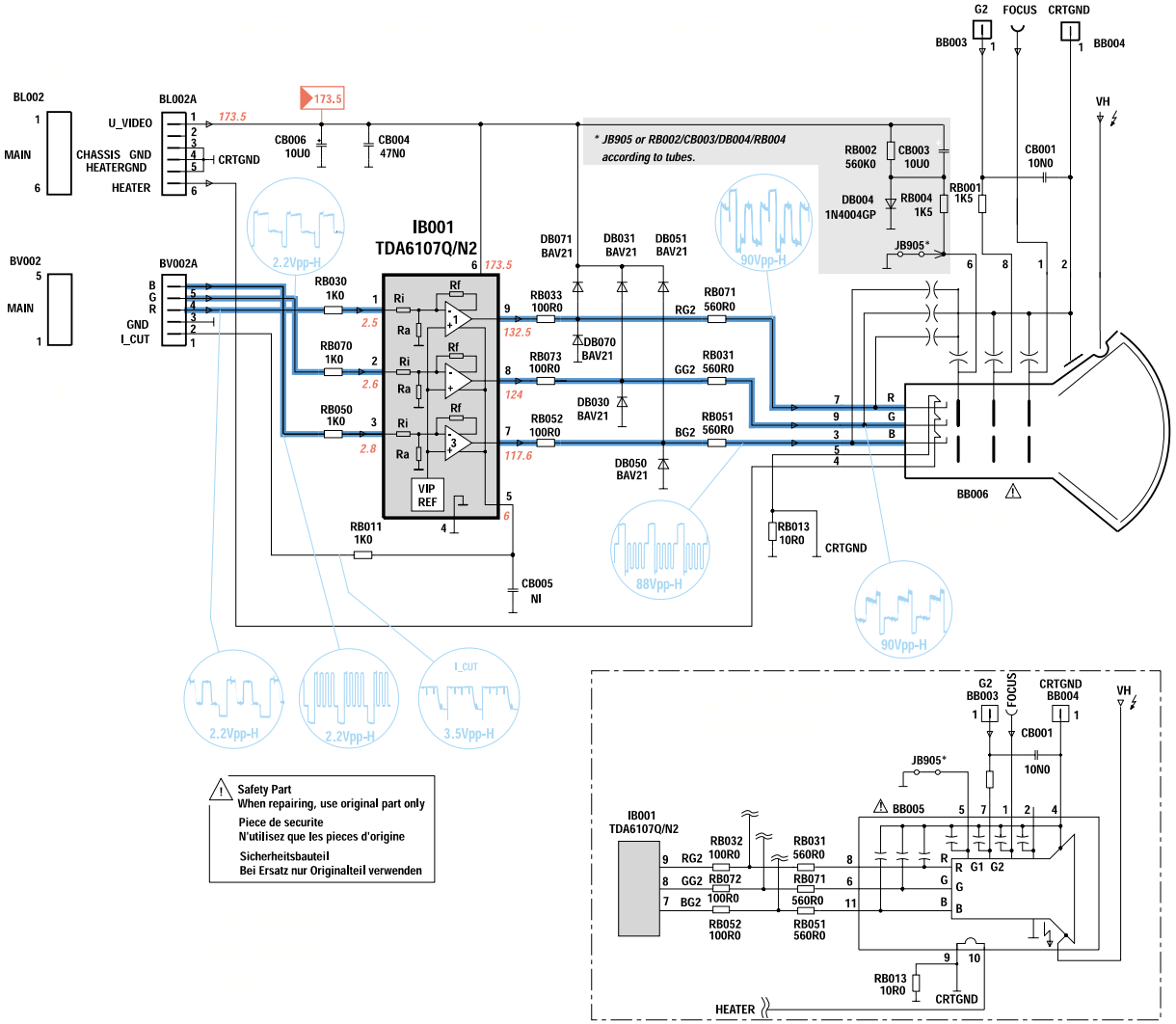

Safety Part
When repairing, use original part only
Piece de securite
N'utilisez que les pieces d'origine
Sicherheitsbauteil
Bei Ersatz nur Originalteil verwenden

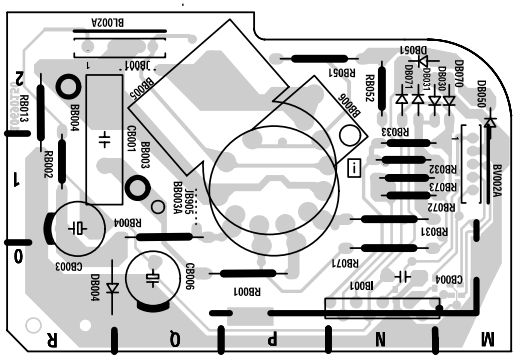

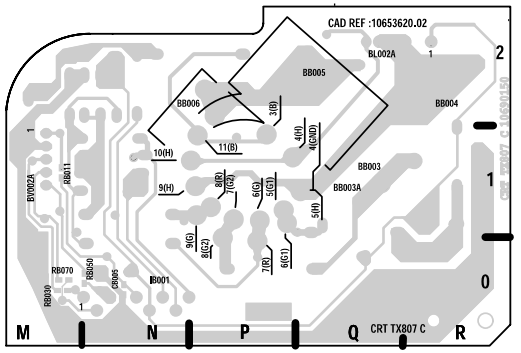

FRONT CONNECTOR BOARD -
PRISES EN FACADE ET INTERCONNEXION DU CLAVIER -
FRONT ANSCHLUSSPLATTE - PIASTRA CONNESSIONE FRONTALE -
PLÁTINA MANDOS FRONTAL

FCB.80001.00

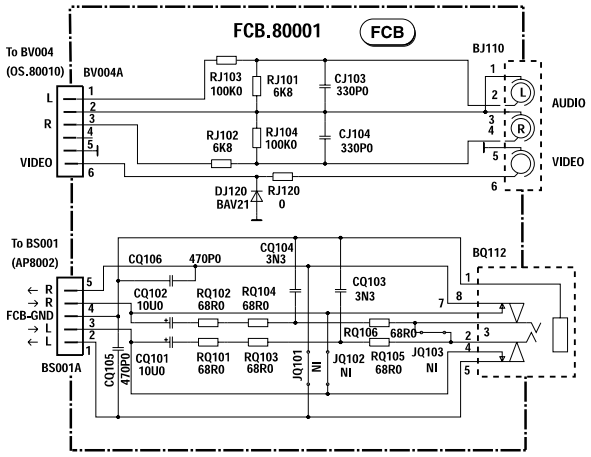

KDB.80001.00

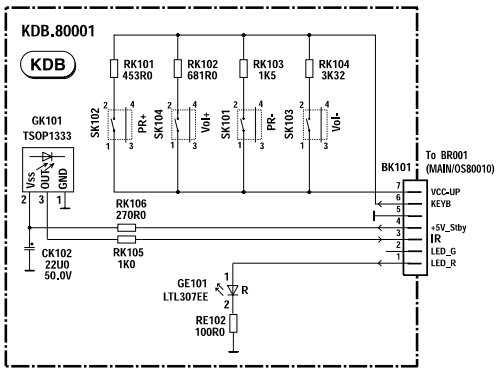

FCB.80001.00 **KDB.80001.00**

COMPONENT SIDE - COTE COMPOSANTS - BESTÜCKUNGSSEITE - LATO COMPONENTI - LADO COMPONENTES

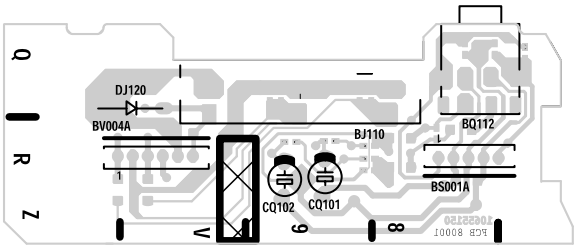

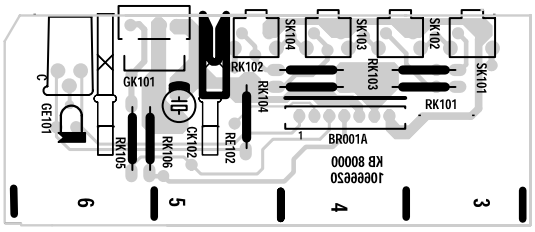

SOLDER SIDE - CÔTE SOUDURES - LÖTSEITE - LATO SALDATURE - LADO SOLDADURAS

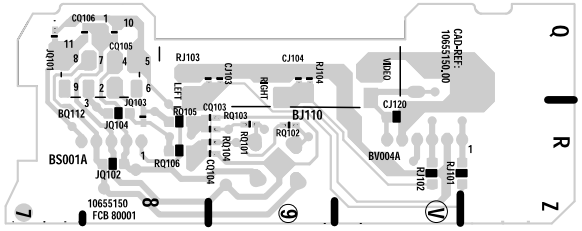

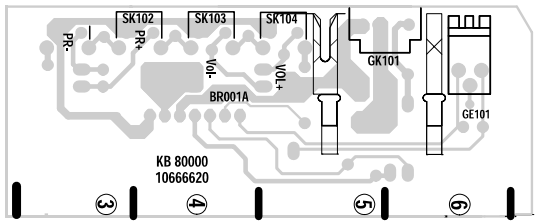

TX807 C/CS
First issue 03 / 00

KEYBOARD MODULE - PLATINE CLAVIER - TASTATURPLATTE - PISATRA COMANDI - PLATINA TECLADO

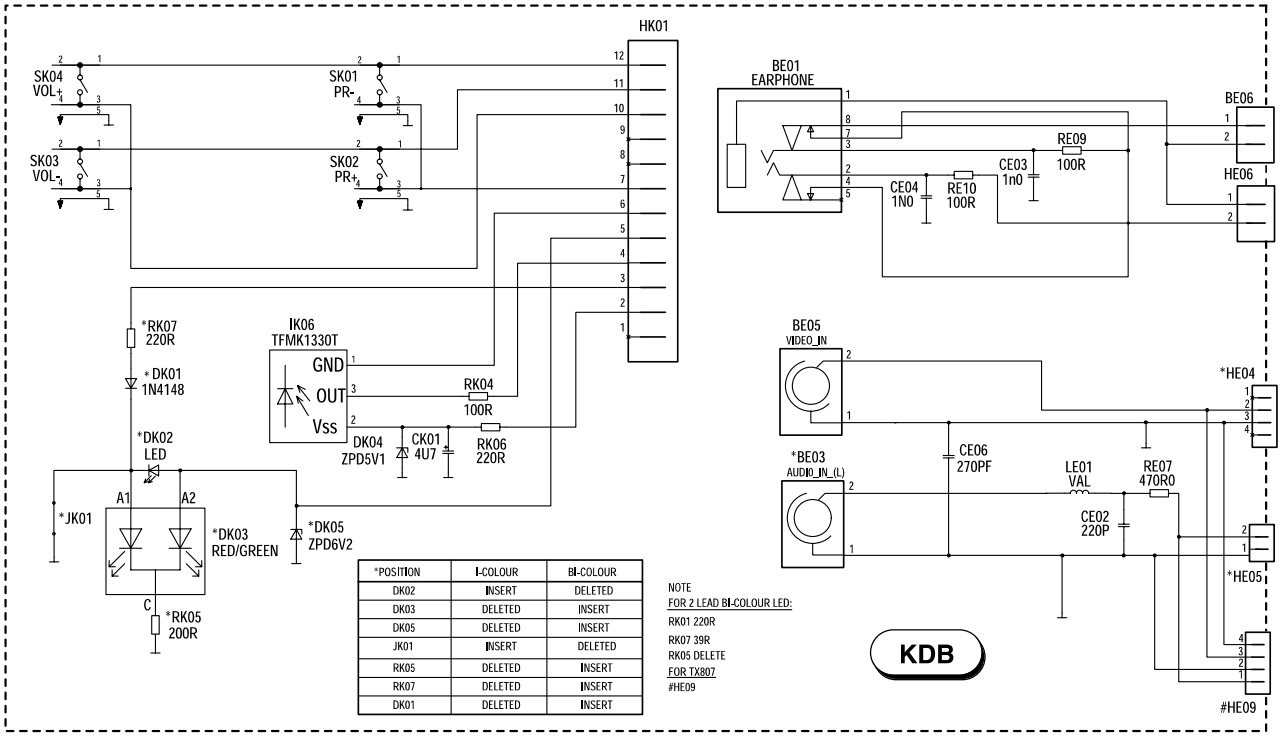

*POSITION	I-COLOUR	BI-COLOUR
DK02	INSERT	DELETED
DK03	DELETED	INSERT
DK05	DELETED	INSERT
JK01	INSERT	DELETED
RK05	DELETED	INSERT
RK07	DELETED	INSERT
DK01	DELETED	INSERT

NOTE
FOR 2 LEAD BI-COLOUR LED:
RK01 220R
RK07 39R
RK05 DELETE
FOR TX807
#HE09

SUB SATELLITE MODULE - SOUS MODULE SATELLITE - SUBMODUL SATELLIT
MODULO SATELLITE - MÓDULO SATELLITE

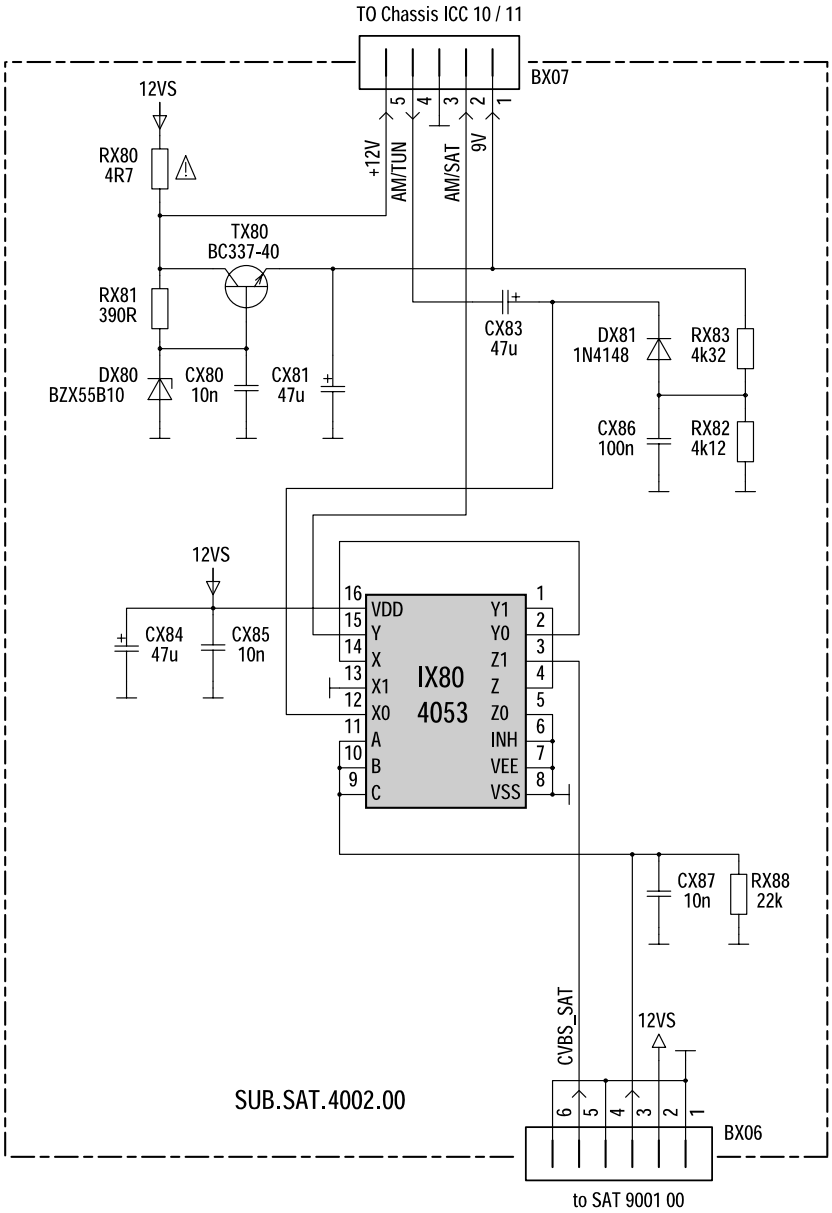

SUB SATELLITE MODULE - SOUS MODULE SATELLITE - SUBMODUL SATELLIT
MODULO SATELLITE - MÓDULO SATÉLITE

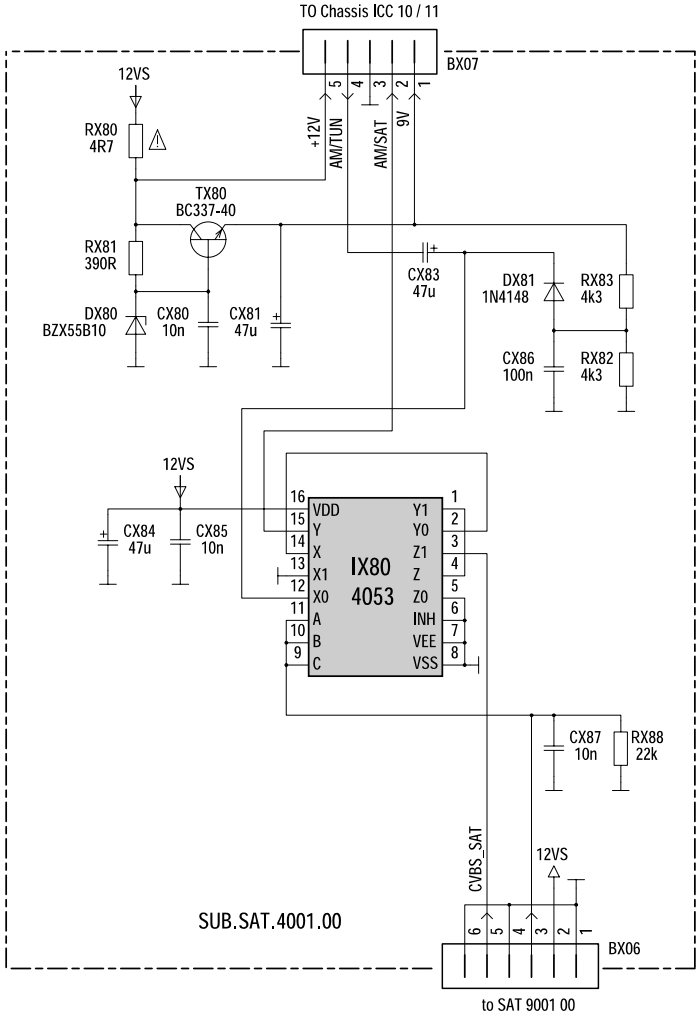

COMPONENT SIDE - COTE ELEMENTS
BESTÜCKUNGSSEITE
LATO COMPONENTI - LADO COMPONENTES

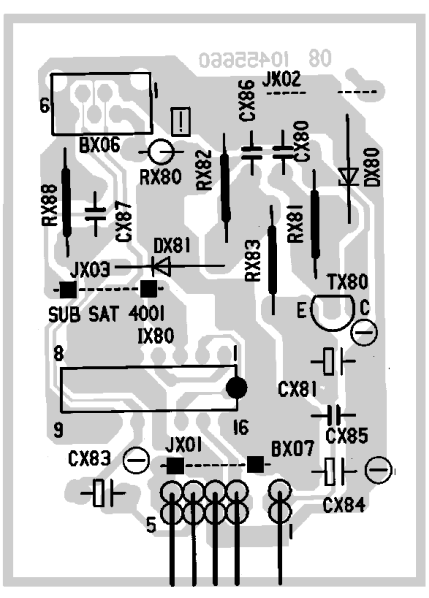

SOLDER SIDE - COTE CUIVRE
LÖTSEITE
LATO SALDATURE - LADO DEL COBRE

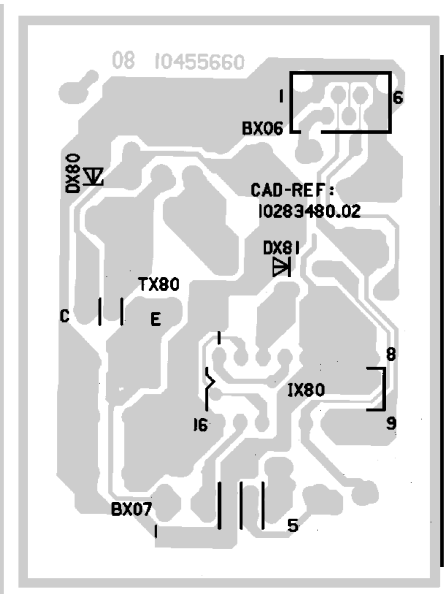

ICC 11
Updated 12 / 96

ICC 10
First issue 09 / 94

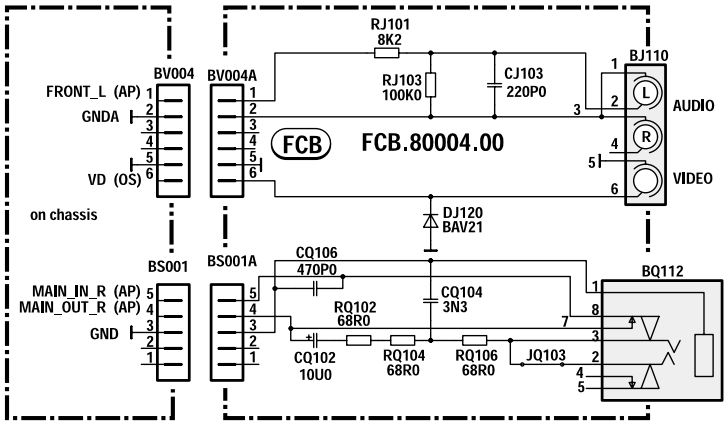

FCB
FCB.80004.00
BV004
BV004A
FRONT_L (AP)
GNDA
VD (OS)
on chassis
BS001
BS001A
MAIN_IN_R (AP)
MAIN_OUT_R (AP)
GND
RJ101
8K2
RJ103
100K0
CJ103
220P0
BJ110
AUDIO
VIDEO
DJ120
BAV21
CQ106
470P0
CQ104
3N3
RQ102
68R0
CQ102
10U0
RQ104
68R0
RQ106
68R0
JQ103
BQ112

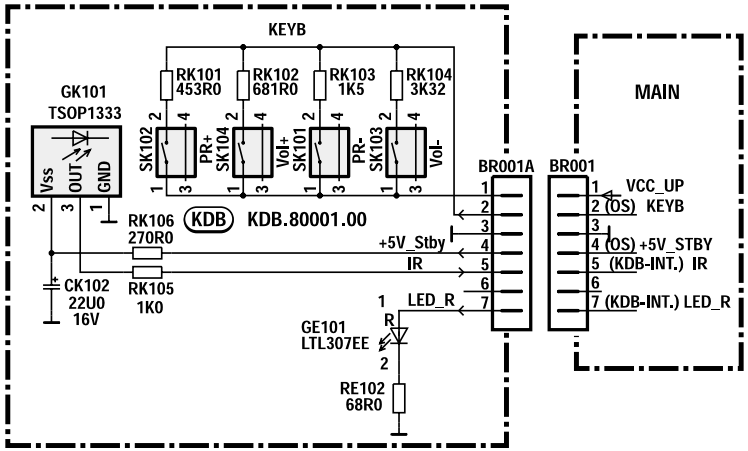

KEYB
GK101
TSOP1333
Vss
OUT
GND
RK101
453R0
RK102
681R0
RK103
1K5
RK104
3K32
SK102
PR+
SK104
Vol+
SK101
PR-
SK103
Vol-
KDB
KDB.80001.00
RK106
270R0
RK105
1K0
CK102
22U0
16V
+5V_Stby
IR
LED_R
GE101
LTL307EE
RE102
68R0
BR001A
BR001
MAIN
VCC_UP
(OS) KEYB
(OS) +5V_STBY
(KDB-INT.) IR
(KDB-INT.) LED_R

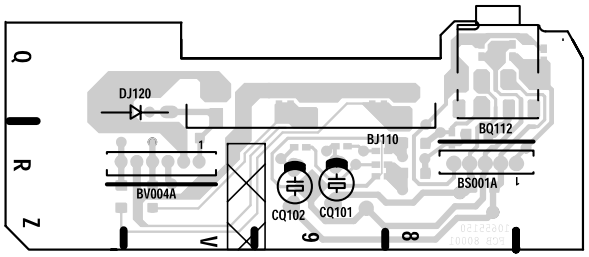

DJ120
BJ110
BQ112
BV004A
BS001A
CQ102
CQ101

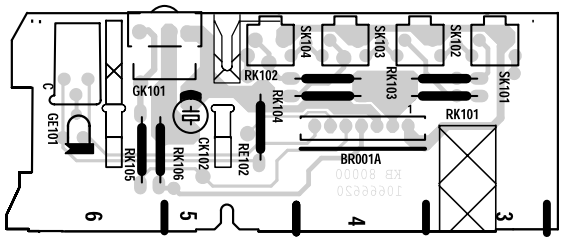

GK101
GE101
RK102
RK104
RK103
RK101
SK104
SK103
SK102
SK101
RK105
RK106
CK102
RE102
BR001A

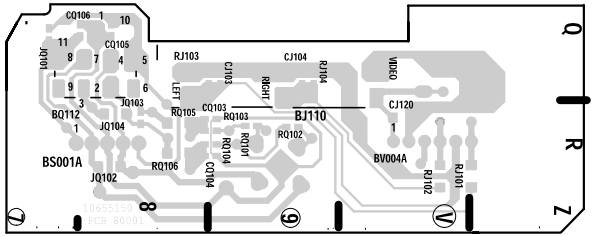

CQ106
CQ105
JQ101
RJ103
CJ104
RJ104
VIDEO
BQ112
JQ103
JQ104
RQ105
CQ103
RQ103
BJ110
CJ120
RQ102
BS001A
JQ102
RQ106
CQ104
RQ104
RQ101
BV004A
RJ102
RJ101

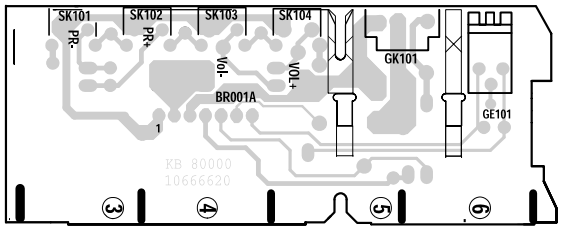

SK101
SK102
SK103
SK104
PR-
PR+
Vol-
VOL+
GK101
BR001A
GE101

FRONT CONNECTOR BOARD - PRISES EN FACADE ET INTERCONNEXION DU CLAVIER - FRONT ANSCHLUSSPLATTE - PIASTRA CONNESSIONE FRONTALE - PLÁTINA MANDOS FRONTAL

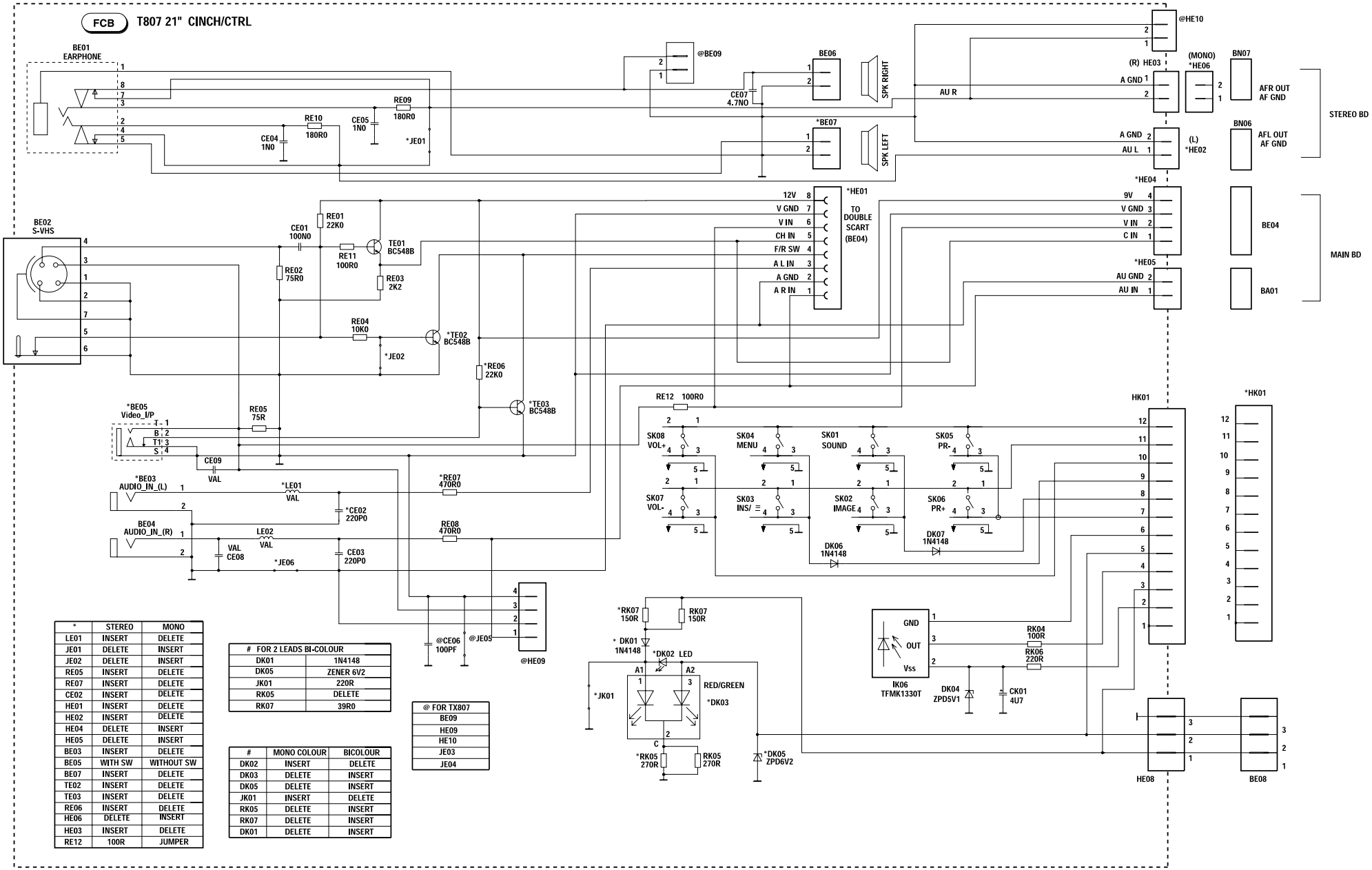

*	STEREO	MONO
LE01	INSERT	DELETE
JE01	DELETE	INSERT
JE02	DELETE	INSERT
RE05	INSERT	DELETE
RE07	INSERT	DELETE
CE02	INSERT	DELETE
HE01	INSERT	DELETE
HE02	INSERT	DELETE
HE04	DELETE	INSERT
HE05	DELETE	INSERT
BE03	INSERT	DELETE
BE05	WITH SW	WITHOUT SW
BE07	INSERT	DELETE
TE02	INSERT	DELETE
TE03	INSERT	DELETE
RE06	INSERT	DELETE
HE06	DELETE	INSERT
HE03	INSERT	DELETE
RE12	100R	JUMPER

#	FOR 2 LEADS BI-COLOUR
DK01	1N4148
DK05	ZENER 6V2
JK01	220R
RK05	DELETE
RK07	39R0

#	MONO COLOUR	BICOLOUR
DK02	INSERT	DELETE
DK03	DELETE	INSERT
DK05	DELETE	INSERT
JK01	INSERT	DELETE
RK05	DELETE	INSERT
RK07	DELETE	INSERT
DK01	DELETE	INSERT

@ FOR TX807
BE09
HE09
HE10
JE03
JE04

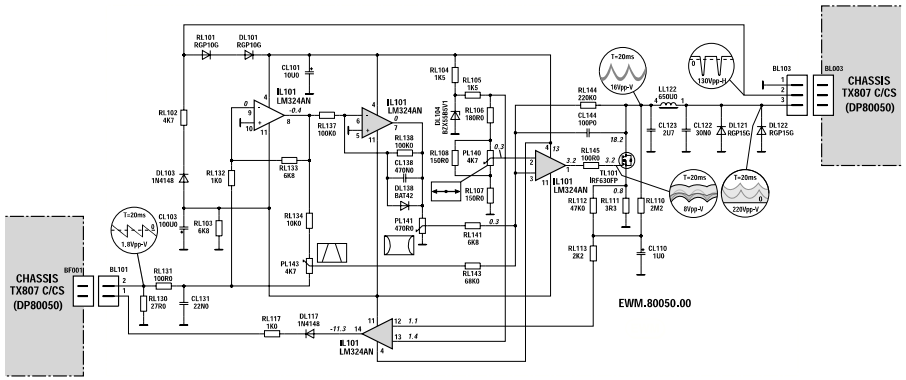
CHASSIS
TX807 C/CS
(DP80050)
CHASSIS
TX807 C/CS
(DP80050)
IL101
LM324AN
EWM.80050.00

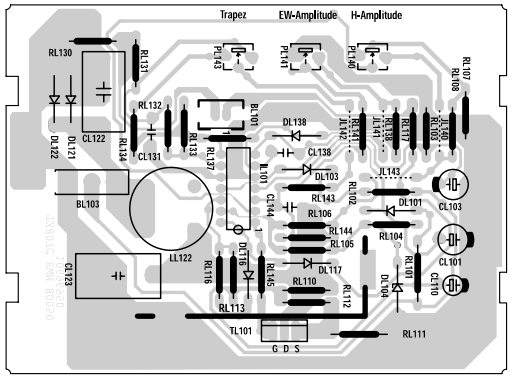
Trapez
EW-Amplitude
H-Amplitude

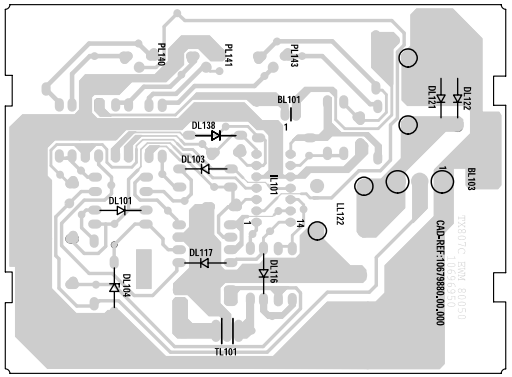
CAD-REF:10979980.00.000

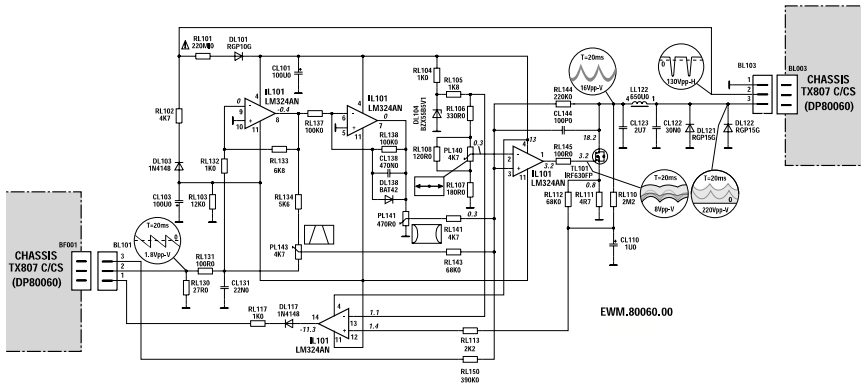
CHASSIS
TX807 C/CS
(DP80060)
CHASSIS
TX807 C/CS
(DP80060)
IL101
LM324AN
EWM.80060.00

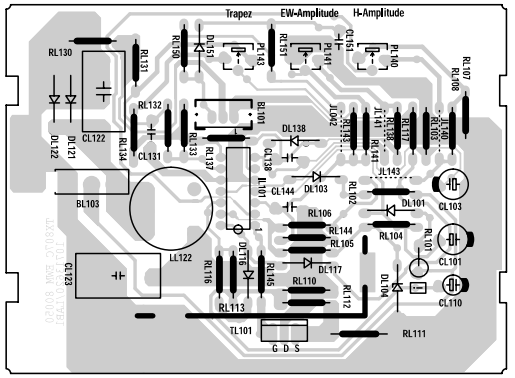
Trapez
EW-Amplitude
H-Amplitude

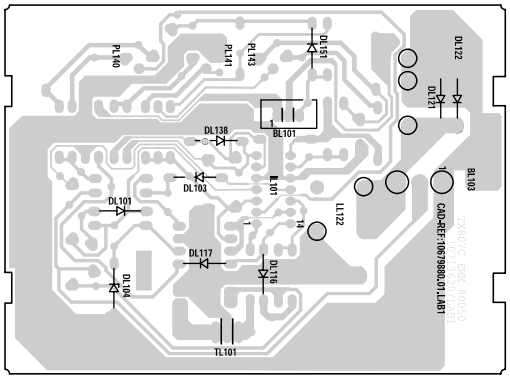
CAD-REF:10979980.01.LAB1

SUB SATELLITE MODULE - SOUS MODULE SATELLITE - SUBMODUL SATELLIT
MODULO SATELLITE - MÓDULO SATELLITE

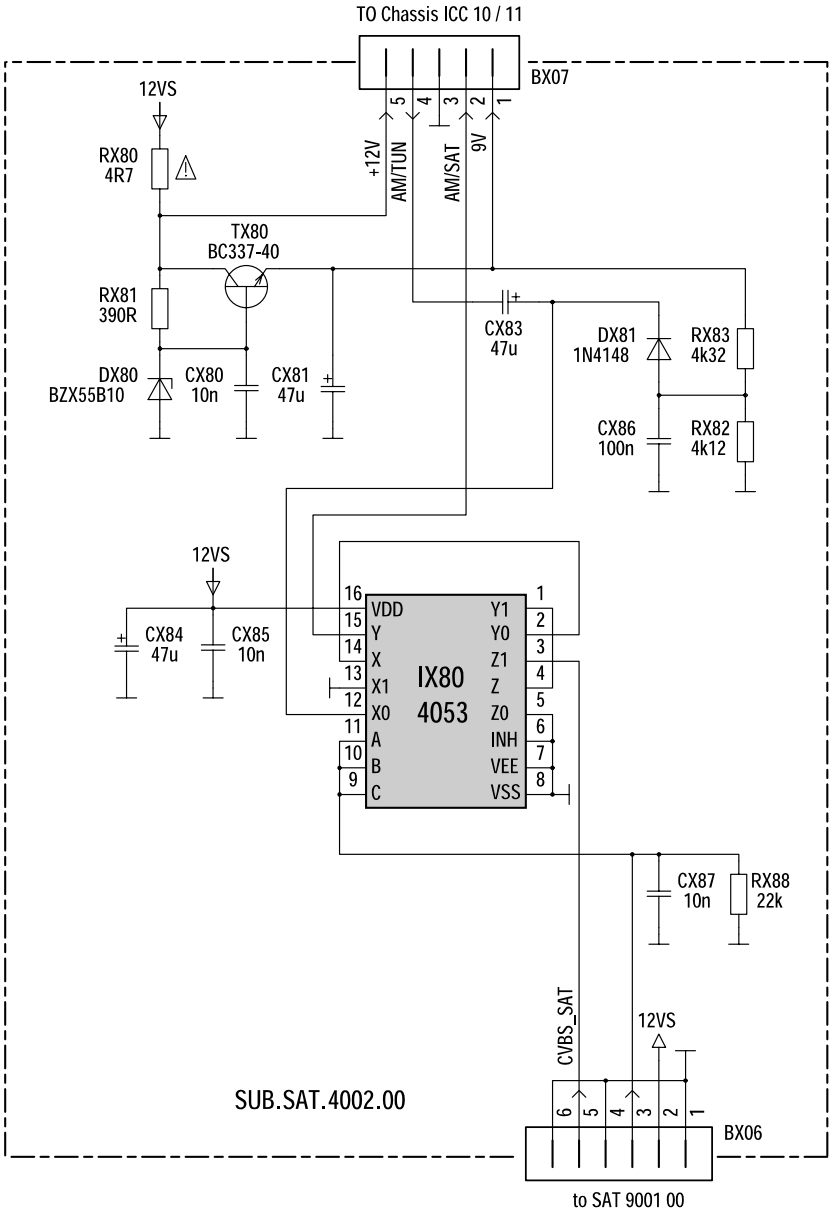

SUB SATELLITE MODULE - SOUS MODULE SATELLITE - SUBMODUL SATELLIT
MODULO SATELLITE - MÓDULO SATÉLITE

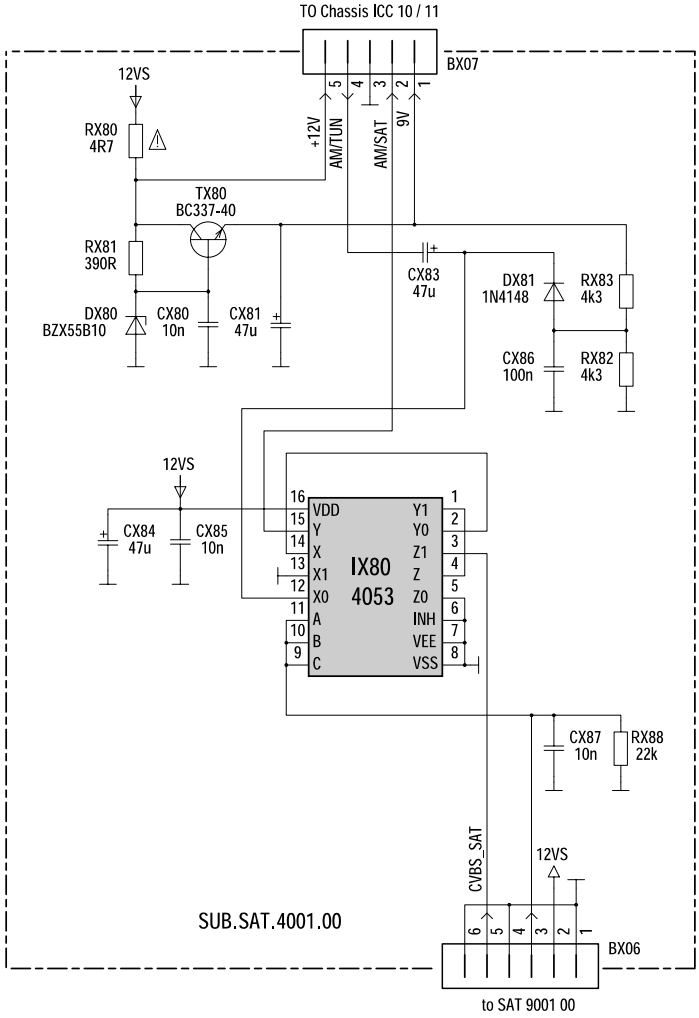

COMPONENT SIDE - COTE ELEMENTS
BESTÜCKUNGSSEITE
LATO COMPONENTI - LADO COMPONENTES

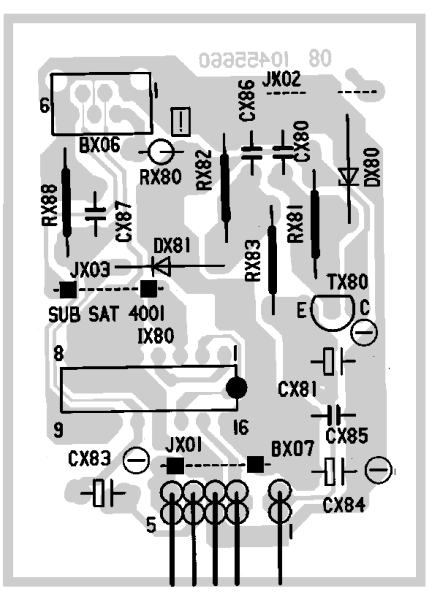

SOLDER SIDE - COTE CUIVRE
LÖTSEITE
LATO SALDATURE - LADO DEL COBRE

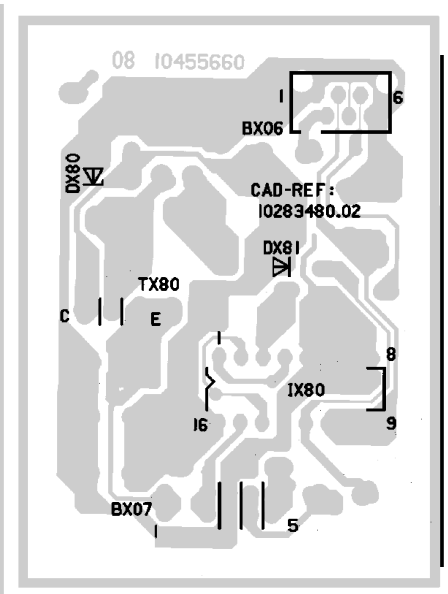

ICC 11
Updated 12 / 96

ICC 10
First issue 09 / 94

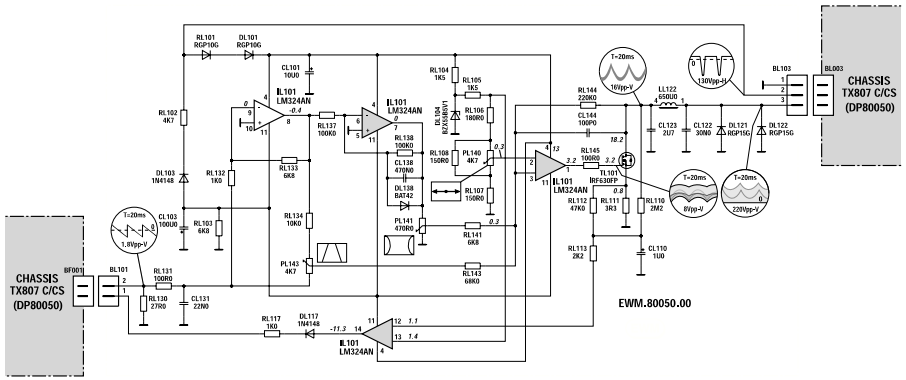
CHASSIS
TX807 C/CS
(DP80050)
CHASSIS
TX807 C/CS
(DP80050)
IL101
LM324AN
EWM.80050.00

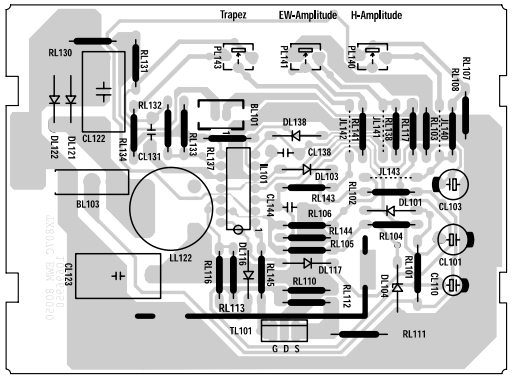
Trapez
EW-Amplitude
H-Amplitude

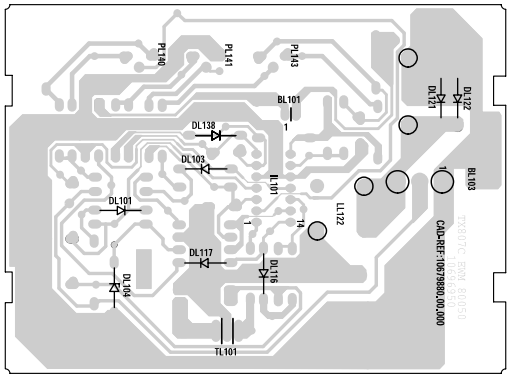
CAD-REF:10979980.00.000

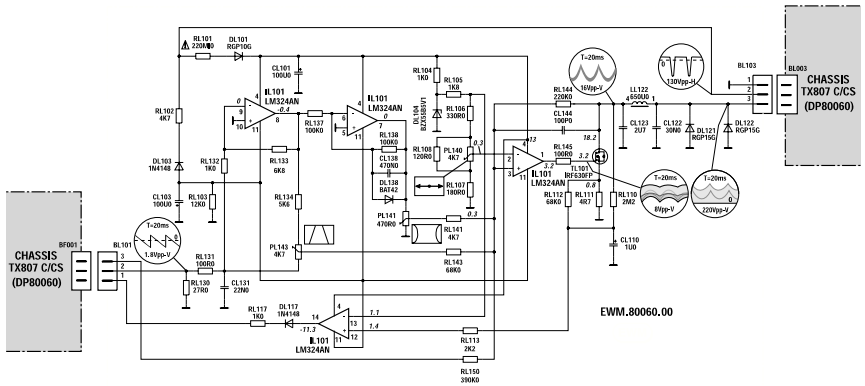
CHASSIS
TX807 C/CS
(DP80060)
CHASSIS
TX807 C/CS
(DP80060)
IL101
LM324AN
EWM.80060.00

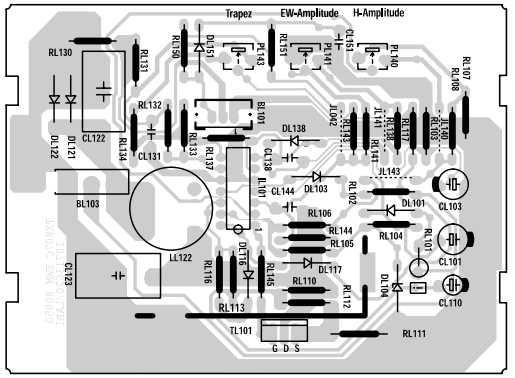
Trapez
EW-Amplitude
H-Amplitude

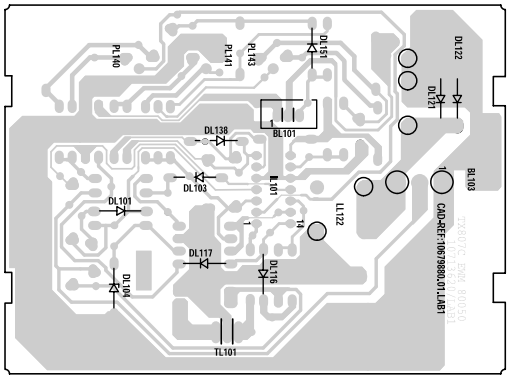
CAD-REF:10979980.01.LAB1

SUB SATELLITE MODULE - SOUS MODULE SATELLITE - SUBMODUL SATELLIT
MODULO SATELLITE - MÓDULO SATELLITE

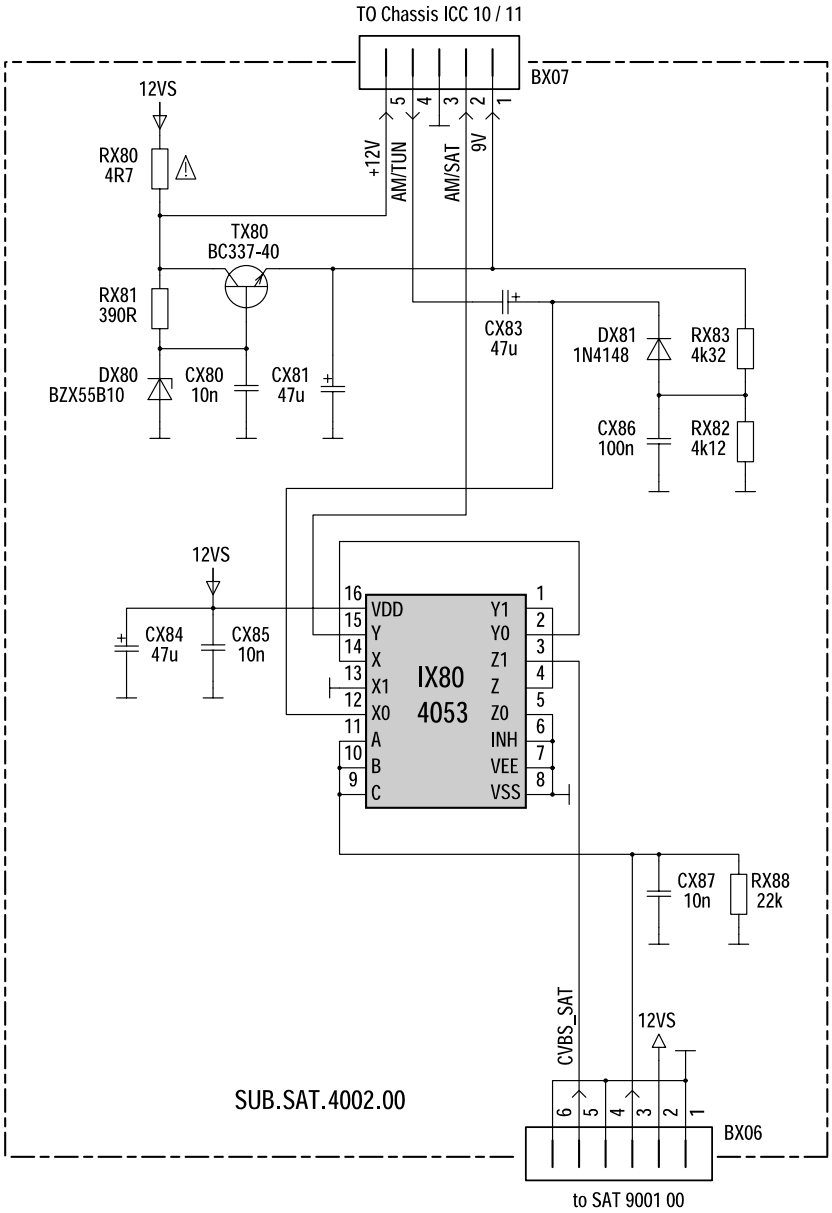

SUB SATELLITE MODULE - SOUS MODULE SATELLITE - SUBMODUL SATELLIT
MODULO SATELLITE - MÓDULO SATÉLITE

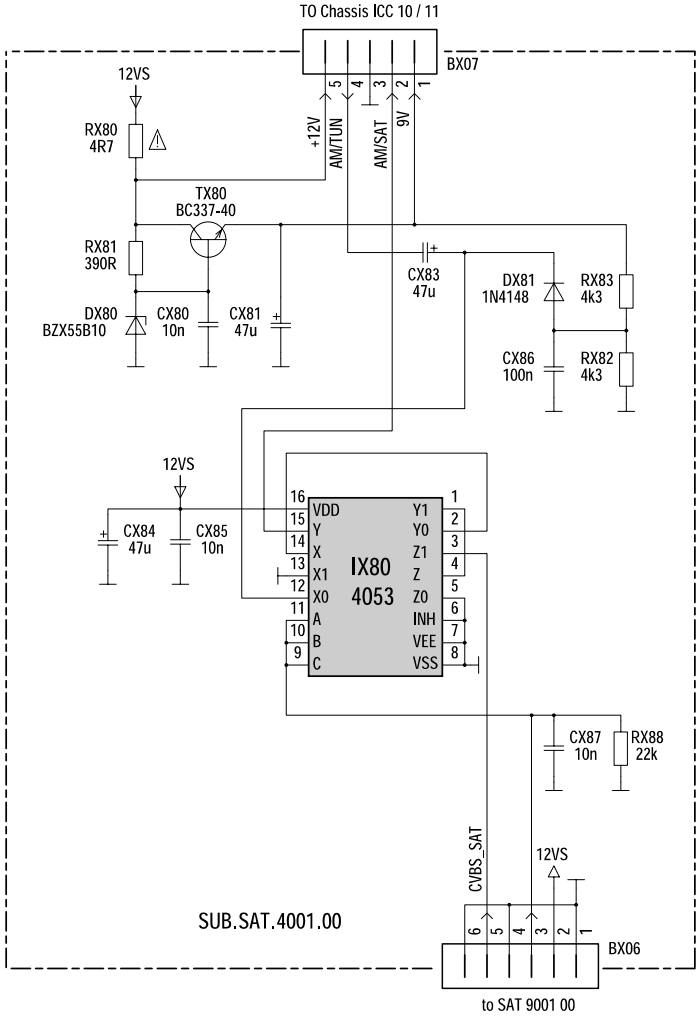

COMPONENT SIDE - COTE ELEMENTS
BESTÜCKUNGSSEITE
LATO COMPONENTI - LADO COMPONENTES

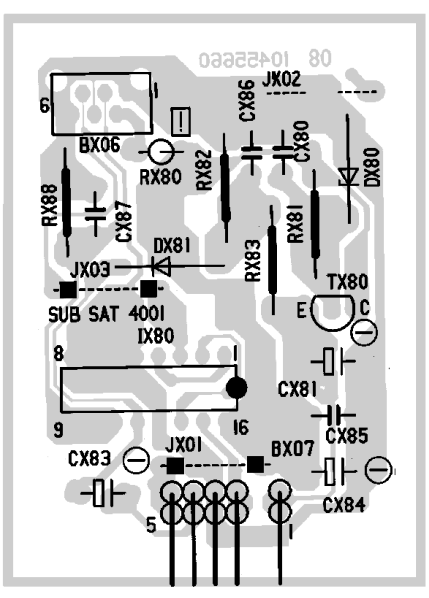

SOLDER SIDE - COTE CUIVRE
LÖTSEITE
LATO SALDATURE - LADO DEL COBRE

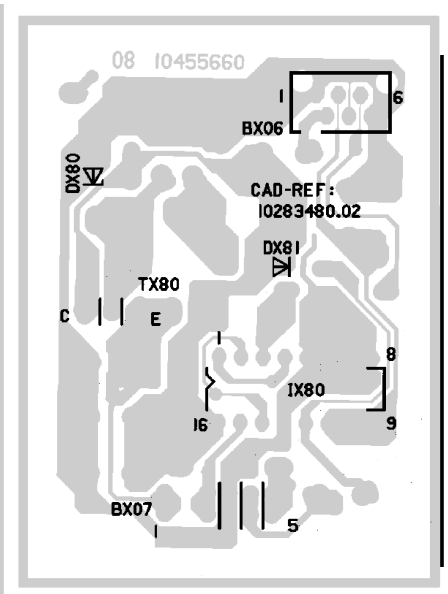

ICC 11
Updated 12 / 96

ICC 10
First issue 09 / 94

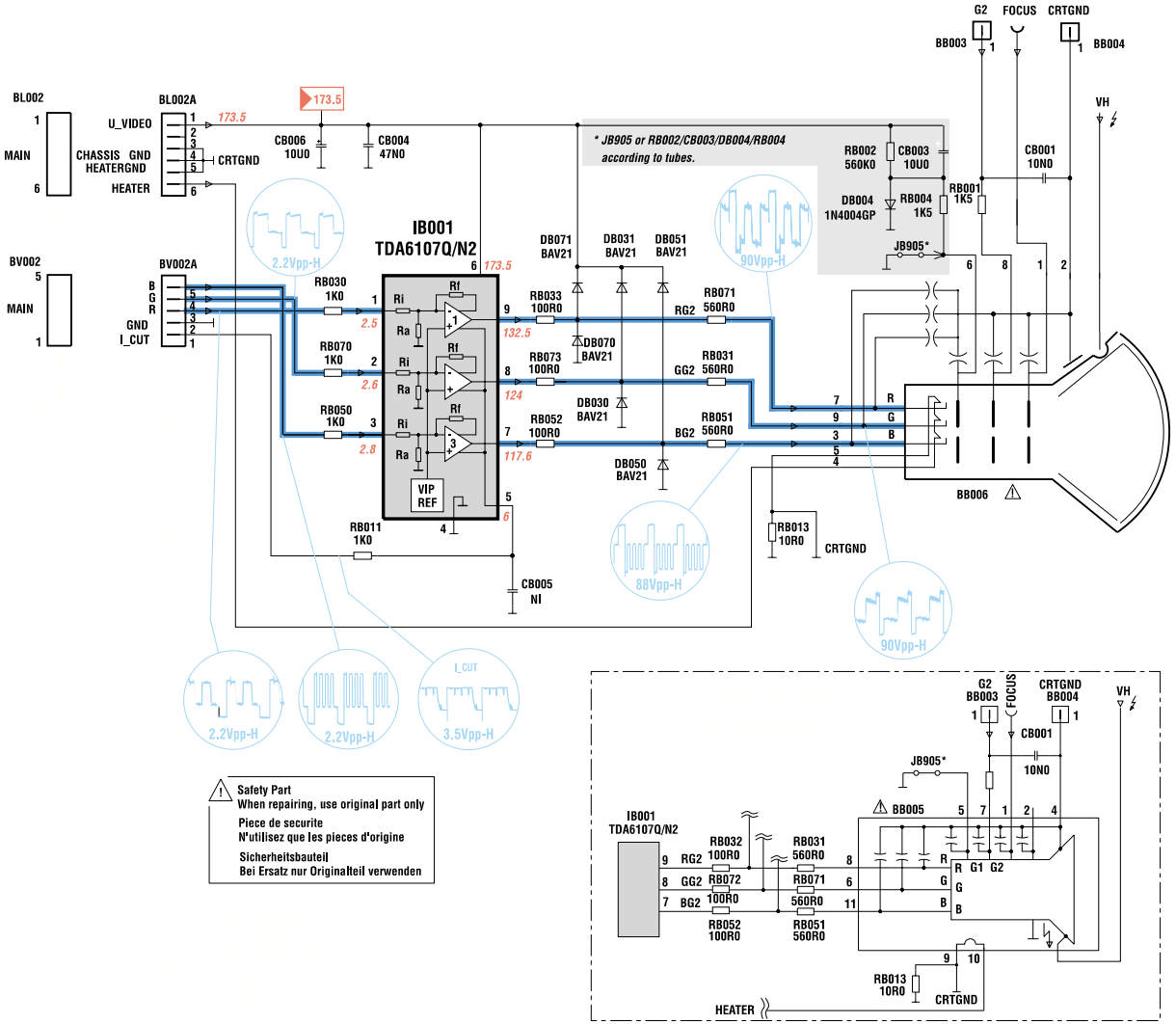
BL002
MAIN
BL002A
U_VIDEO
CHASSIS GND
HEATERGND
CRTGND
HEATER
BV002
BV002A
GND
I_CUT
IB001
TDA6107Q/N2
VIP REF
RB030 1K0
RB070 1K0
RB050 1K0
RB011 1K0
CB006 10U0
CB004 47N0
CB005 NI
RB033 100R0
RB073 100R0
RB052 100R0
RB071 560R0
RB031 560R0
RB051 560R0
RB013 10R0
CRTGND
DB071 BAV21
DB031 BAV21
DB051 BAV21
DB070 BAV21
DB030 BAV21
DB050 BAV21
RB002 560K0
CB003 10U0
DB004 1N4004GP
RB004 1K5
RB001 1K5
CB001 10N0
JB905*
* JB905 or RB002/CB003/DB004/RB004 according to tubes.
G2
FOCUS
CRTGND
BB003
BB004
VH
BB006
2.2Vpp-H
90Vpp-H
88Vpp-H
90Vpp-H
2.2Vpp-H
2.2Vpp-H
I_CUT
3.5Vpp-H
173.5
132.5
124
117.6
2.5
2.6
2.8
Safety Part
When repairing, use original part only
Piece de securite
N'utilisez que les pieces d'origine
Sicherheitsbauteil
Bei Ersatz nur Originalteil verwenden
BB005
G1
G2
HEATER

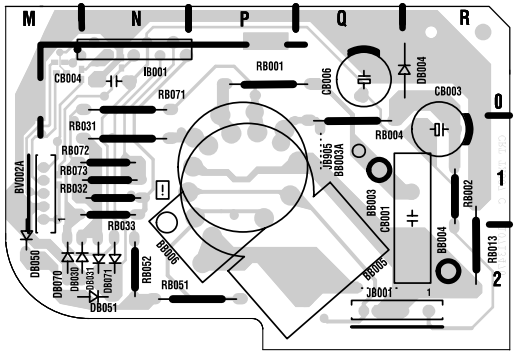
M
N
P
Q
R
CRT TX807 C

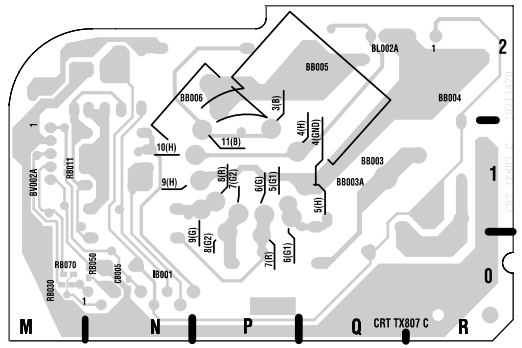
M
N
P
Q
R
CRT TX807 C

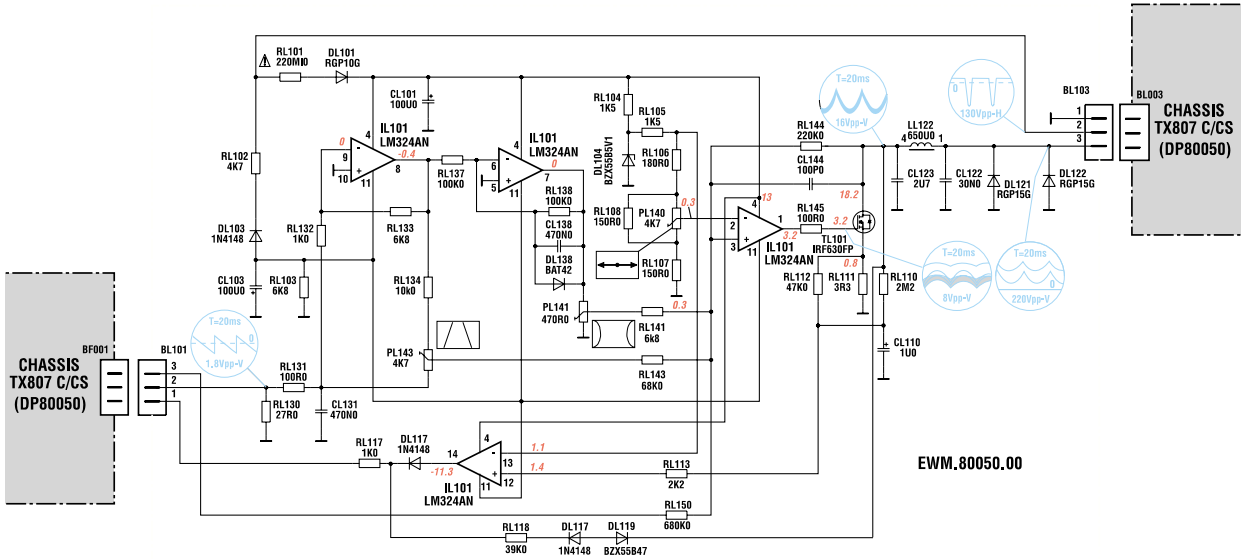
CHASSIS
TX807 C/CS
(DP80050)
BF001
BL101
BL103
BL003
CHASSIS
TX807 C/CS
(DP80050)
IL101
LM324AN
TL101
IRF630FP
EWM.80050.00

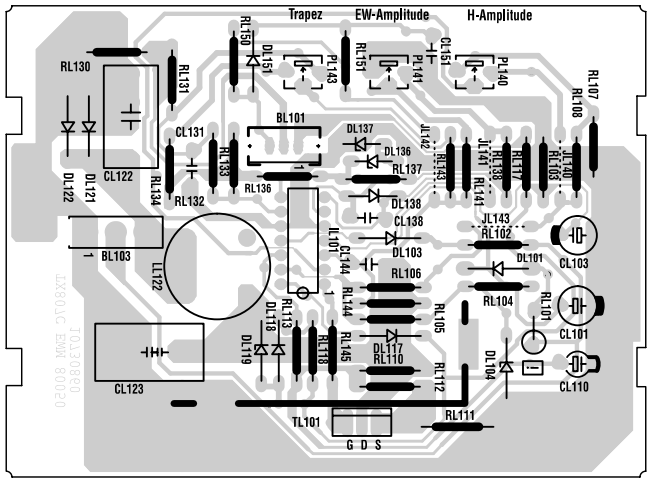
Trapez
EW-Amplitude
H-Amplitude
BL101
BL103
TL101
G D S

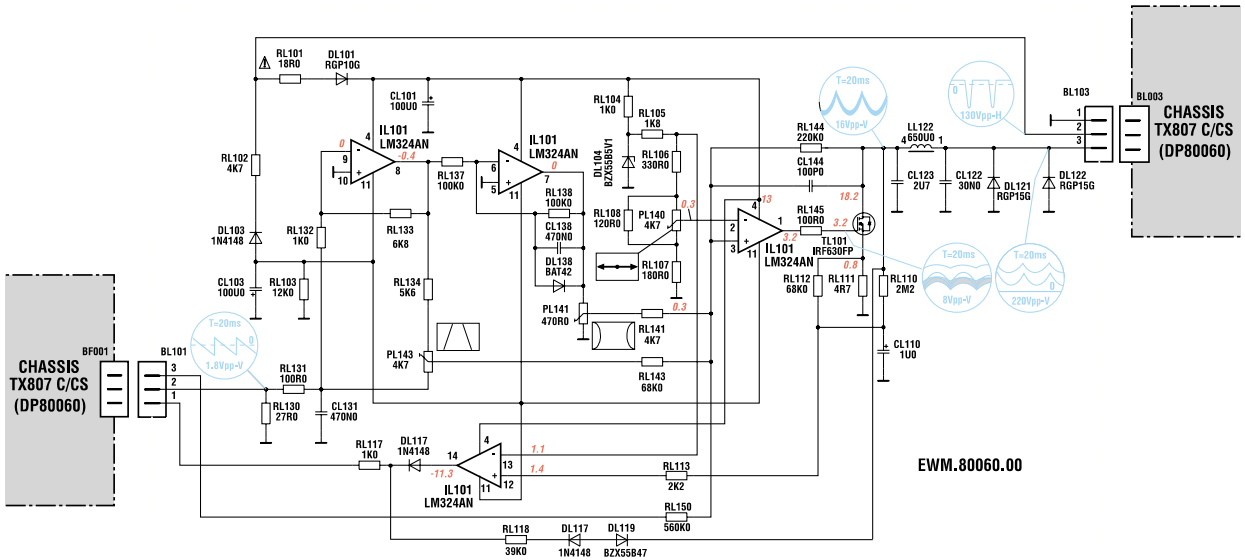
CHASSIS
TX807 C/CS
(DP80060)
BF001
BL101
BL103
BL003
CHASSIS
TX807 C/CS
(DP80060)
IL101
LM324AN
TL101
IRF630FP
EWM.80060.00

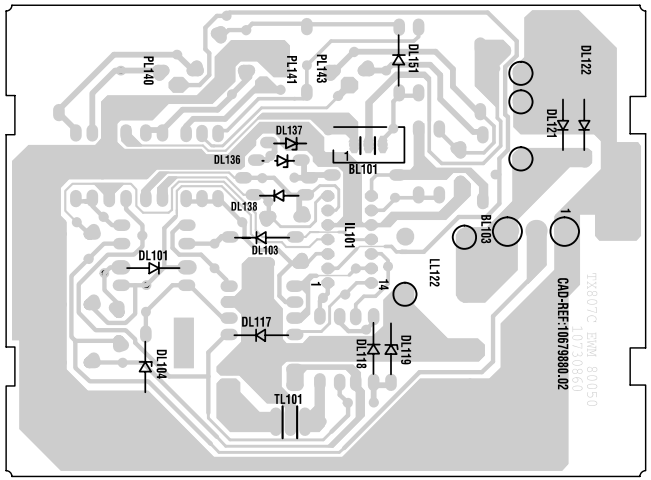
BL101
BL103
TL101
CAD-REF:10679880.02

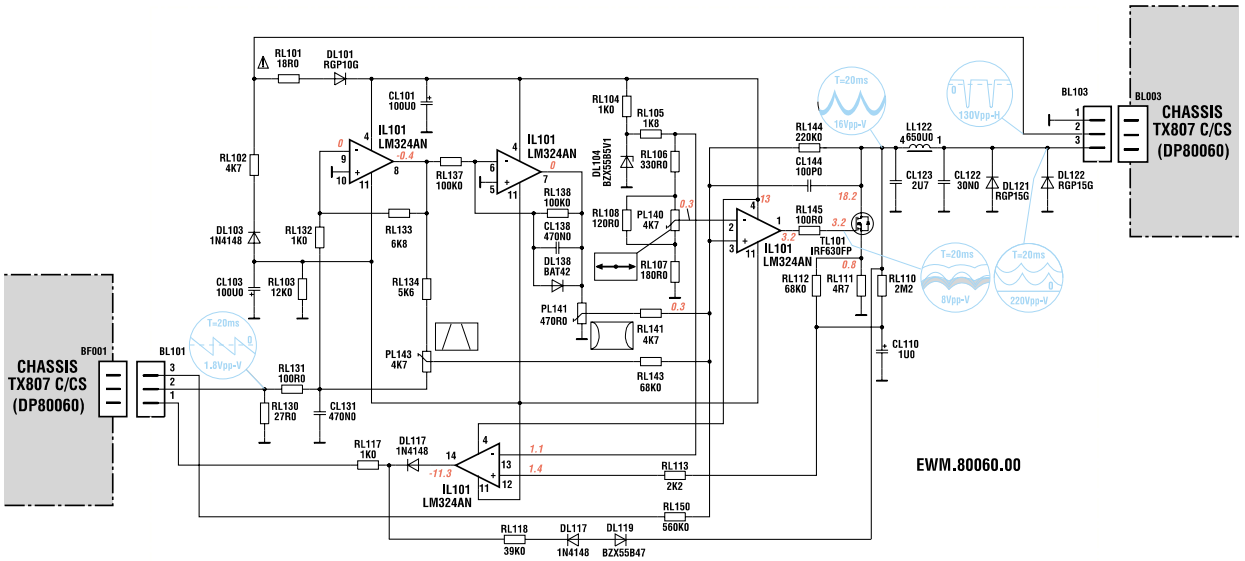
CHASSIS
TX807 C/CS
(DP80060)
BF001
BL101
IL101
LM324AN
TL101
IRF630FP
BL103
BL003
CHASSIS
TX807 C/CS
(DP80060)
EWM.80060.00

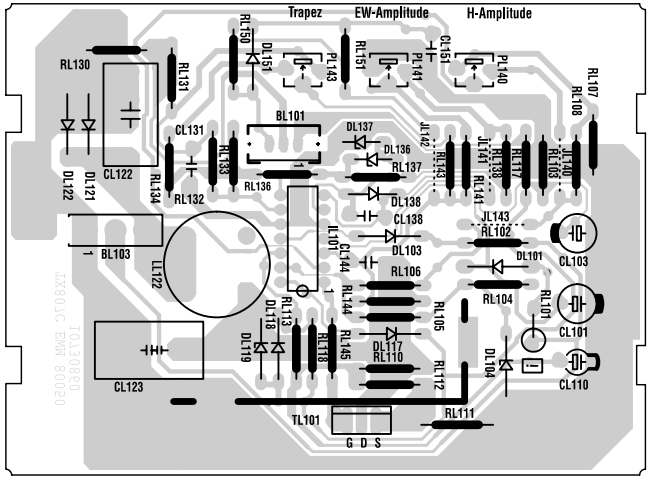
Trapez
EW-Amplitude
H-Amplitude
BL101
BL103
TL101
G D S
EWM.80060.00

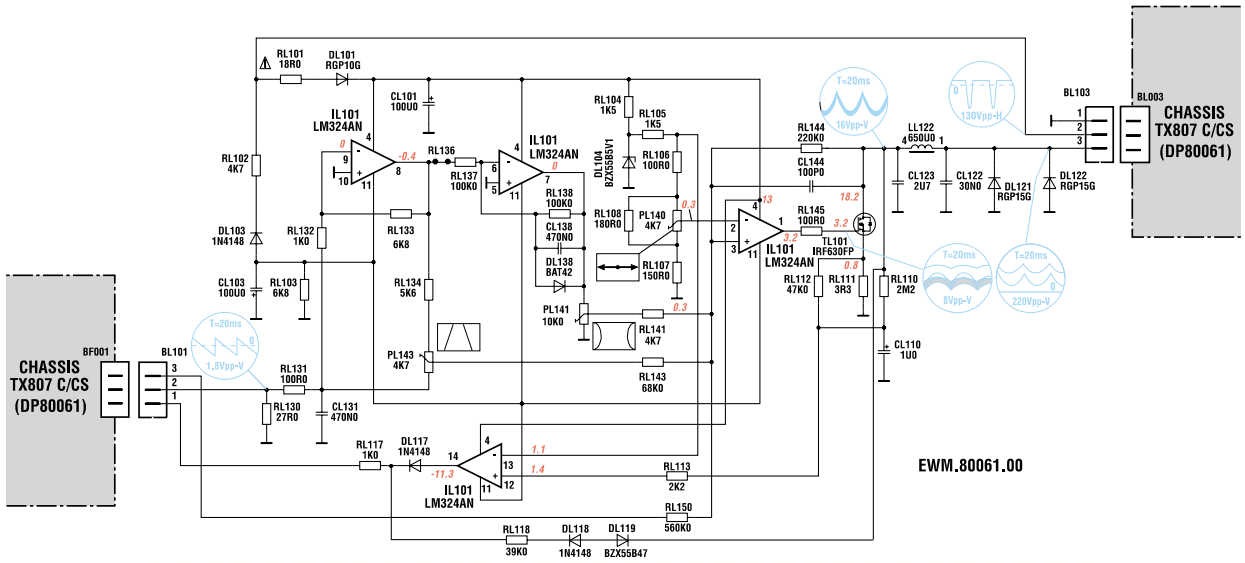
CHASSIS
TX807 C/CS
(DP80061)
BF001
BL101
IL101
LM324AN
TL101
IRF630FP
BL103
BL003
CHASSIS
TX807 C/CS
(DP80061)
EWM.80061.00

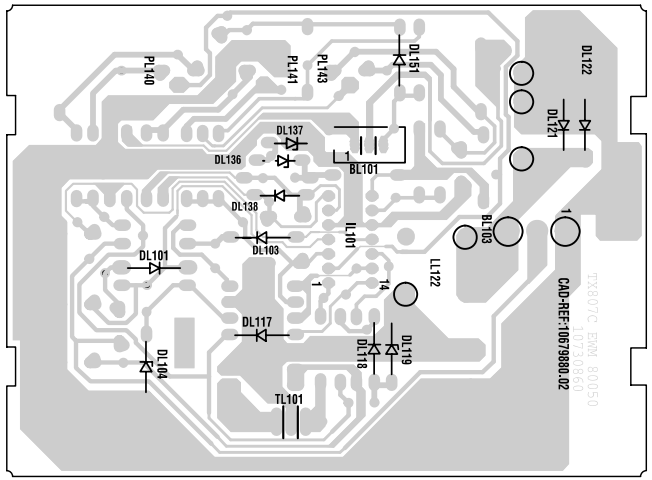
BL101
BL103
TL101
CAD-REF-10079880.02
EWM.80050

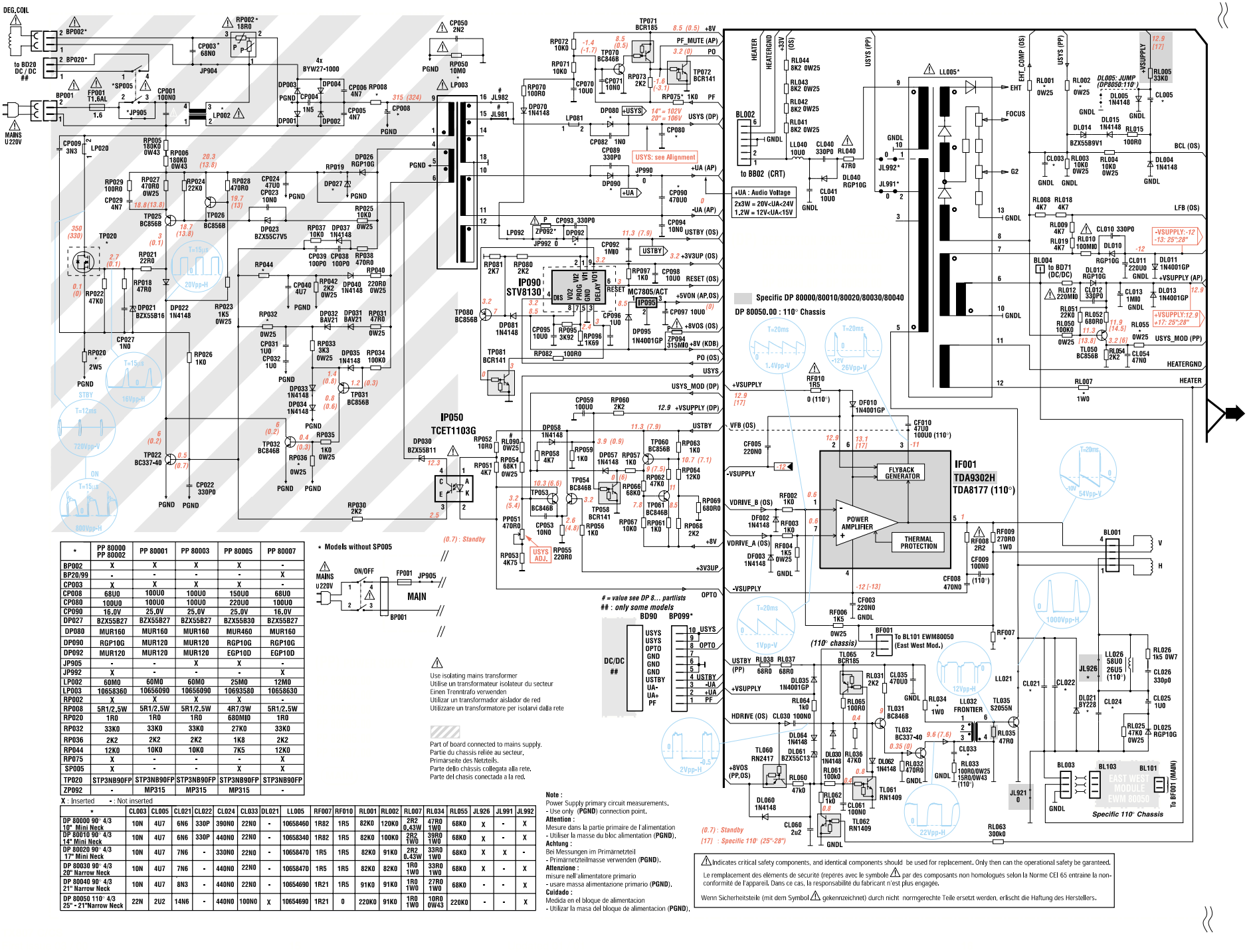

*	PP 80000 PP 80002	PP 80001	PP 80003	PP 80005	PP 80007
BP002	X	X	X	X	-
BP20/99	-	-	-	-	X
CP003	X	X	X	X	-
CP008	68U0	100U0	100U0	150U0	68U0
CP080	100U0	100U0	100U0	220U0	100U0
CP090	16.0V	25.0V	25.0V	25.0V	16.0V
DP027	BZX55B27	BZX55B27	BZX55B27	BZX55B30	BZX55B27
DP080	MUR160	MUR160	MUR160	MUR460	MUR160
DP090	RGP10G	MUR120	MUR120	RGP10G	RGP10G
DP092	MUR120	MUR120	MUR120	EGP10D	EGP10D
JP905	-	-	X	X	-
JP992	X	-	-	-	X
LP002	60M0	60M0	60M0	25M0	12M0
LP003	10658360	10656090	10656090	10693580	10658630
RP002	X	X	X	X	-
RP008	5R1/2.5W	5R1/2.5W	5R1/2.5W	4R7/3W	5R1/2.5W
RP020	1R0	1R0	1R0	680MI0	1R0
RP032	33K0	33K0	33K0	27K0	33K0
RP036	2K2	2K2	2K2	1K8	2K2
RP044	12K0	10K0	10K0	7K5	12K0
RP075	X	-	-	-	X
SP005	X	-	-	X	X
TP020	STP3NB90FP	STP3NB90FP	STP3NB90FP	STP3NB90FP	STP3NB90FP
ZP092	-	MP315	MP315	MP315	-

X : Inserted - : Not inserted

*	CL003	CL005	CL021	CL022	CL024	CL033	DL021	LL005	RF007	RF010	RL001	RL002	RL007	RL034	RL055	JL926	JL991	JL992
DP 80000 90° 4/3 10" Mini Neck	10N	4U7	6N6	330P	390N0	22N0	-	10658460	1R82	1R5	82K0	120K0	2R2 0.43W	47R0 1W0	68K0	X	-	X
DP 80010 90° 4/3 14" Mini Neck	10N	4U7	6N6	330P	440N0	22N0	-	10658340	1R82	1R5	82K0	100K0	2R2 1W0	39R0 1W0	68K0	X	-	X
DP 80020 90° 4/3 17" Mini Neck	10N	4U7	7N6	-	330N0	22N0	-	10658470	1R5	1R5	82K0	91K0	2R2 0.43W	33R0 1W0	68K0	X	X	-
DP 80030 90° 4/3 20" Narrow Neck	10N	4U7	7N6	-	440N0	22N0	-	10658470	1R5	1R5	82K0	82K0	1R0 1W0	33R0 1W0	68K0	X	-	X
DP 80040 90° 4/3 21" Narrow Neck	10N	4U7	8N3	-	440N0	22N0	-	10654690	1R21	1R5	91K0	91K0	1R0 1W0	27R0 1W0	68K0	-	-	X
DP 80050 110° 4/3 25" - 21"Narrow Neck	22N	2U2	14N6	-	440N0	100N0	X	10654690	1R21	0	220K0	91K0	1R0 1W0	10R0 0W43	220K0	-	-	X

Note :
Power Supply primary circuit measurements.
- Use only (PGND) connection point.

Attention :
Mesure dans la partie primaire de l'alimentation
- Utiliser la masse du bloc alimentation (PGND).

Achtung :
Bei Messungen im Primärnetzteil
- Primärnetzteilmasse verwenden (PGND).

Attenzione :
misure nell'alimentatore primario
- usare massa alimentazione primario (PGND).

Cuidado :
Medida en el bloque de alimentacion
- Utilizar la masa del bloque de alimentacion (PGND).

⚠ Indicates critical safety components, and identical components should be used for replacement. Only then can the operational safety be garanteed.

Le remplacement des éléments de sécurité (repérés avec le symbole ⚠ par des composants non homologués selon la Norme CEI 65 entraine la non-conformité de l'appareil. Dans ce cas, la responsabilité du fabricant n'est plus engagée.

Wenn Sicherheitsteile (mit dem Symbol ⚠ gekennzeichnet) durch nicht normgerechte Teile ersetzt werden, erlischt die Haftung des Herstellers.

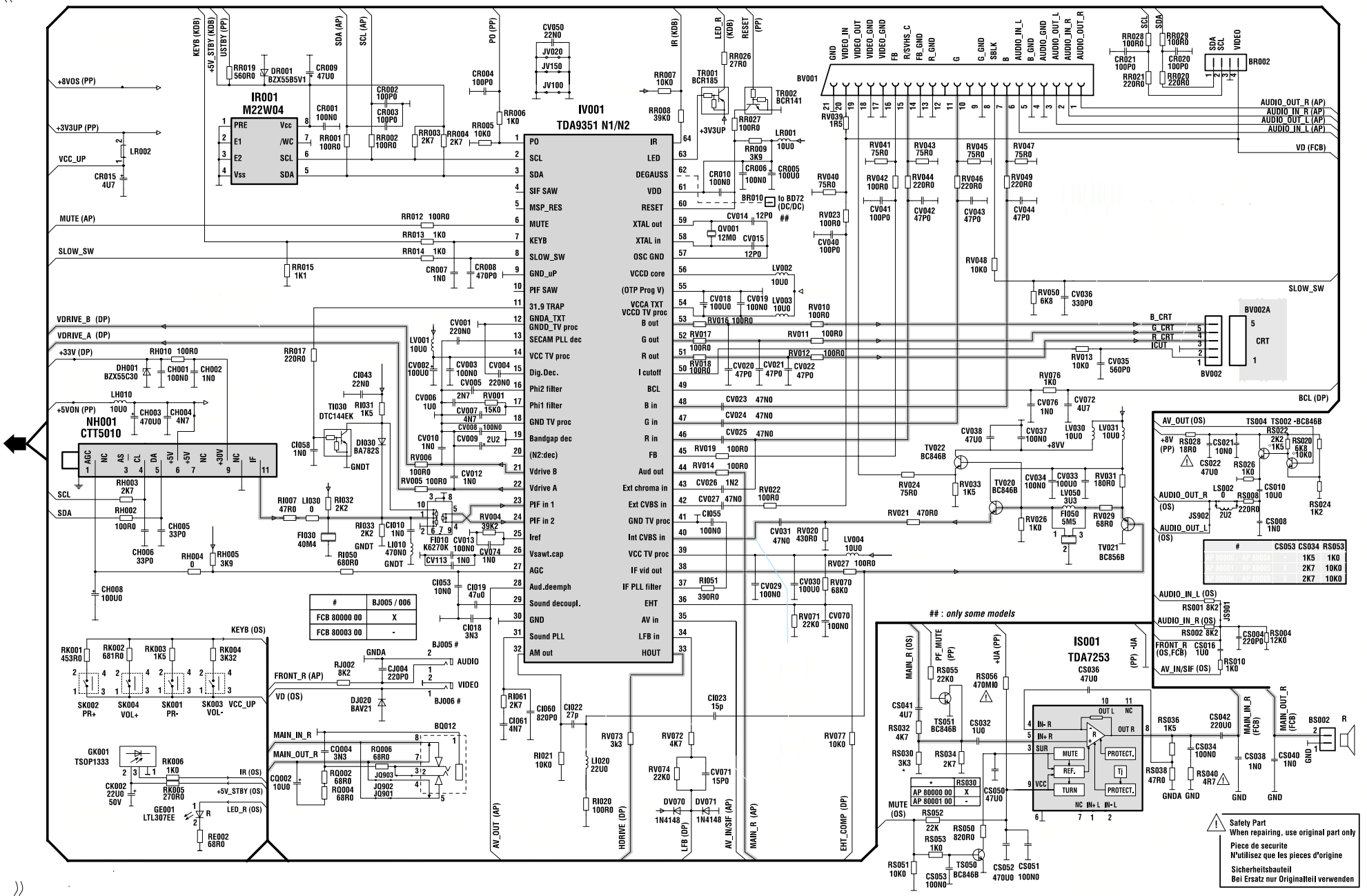
IR001
M22W04
IV001
TDA9351 N1/N2
NH001
CTT5010
IS001
TDA7253
BV001
BV002
BV002A
BR002
BQ012
BJ005 / 006
FCB 80000 00 X
FCB 80003 00 -
: only some models
Safety Part
When repairing, use original part only
Piece de securite
N'utilisez que les pieces d'origine
Sicherheitsbauteil
Bei Ersatz nur Originalteil verwenden

MAIN BOARD - PLATINE PRINCIPALE - CHASSIS GRUNDPLATTE - PIASTRA PRINCIPALE - PLATINA PRINCIPAL

COMPONENT SIDE -
COTE COMPOSANTS -
BESTÜCKUNGSSEITE -
LATO COMPONENTI -
LADO COMPONENTES

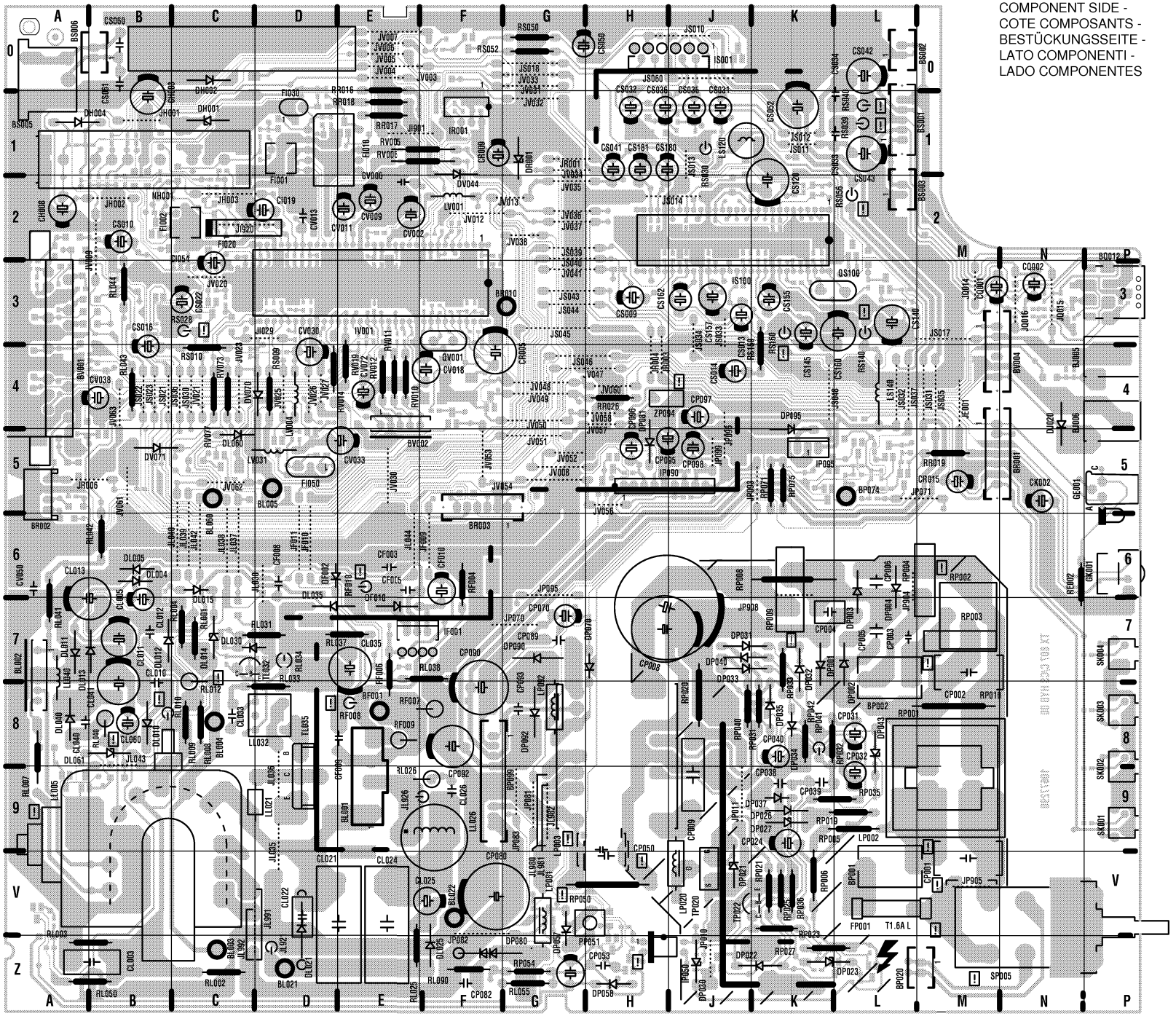

TX807 C/CS
First issue 03 / 00

MAIN BOARD - PLATINE PRINCIPALE - CHASSIS GRUNDPLATTE - PIASTRA PRINCIPALE - PLATINA PRINCIPAL

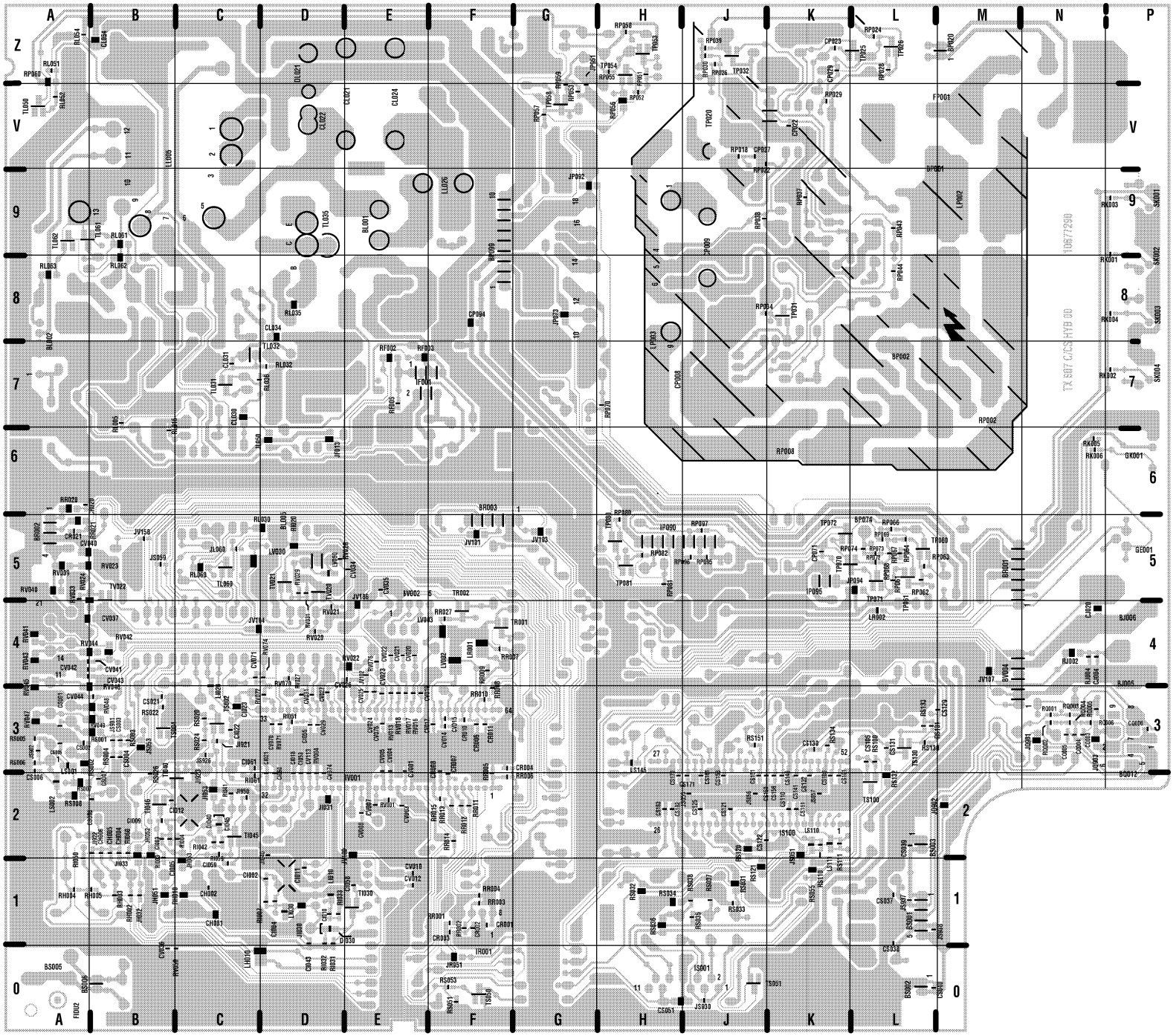

SOLDER SIDE -
CÔTE SOUDURES -
LÖTSEITE -
LATO SALDATURE -
LADO SOLDADURAS

TX807 C/CS
First issue 03 / 00

MAIN BOARD - PLATINE PRINCIPALE - CHASSIS GRUNDPLATTE - PIASTRA PRINCIPALE - PLATINA PRINCIPAL

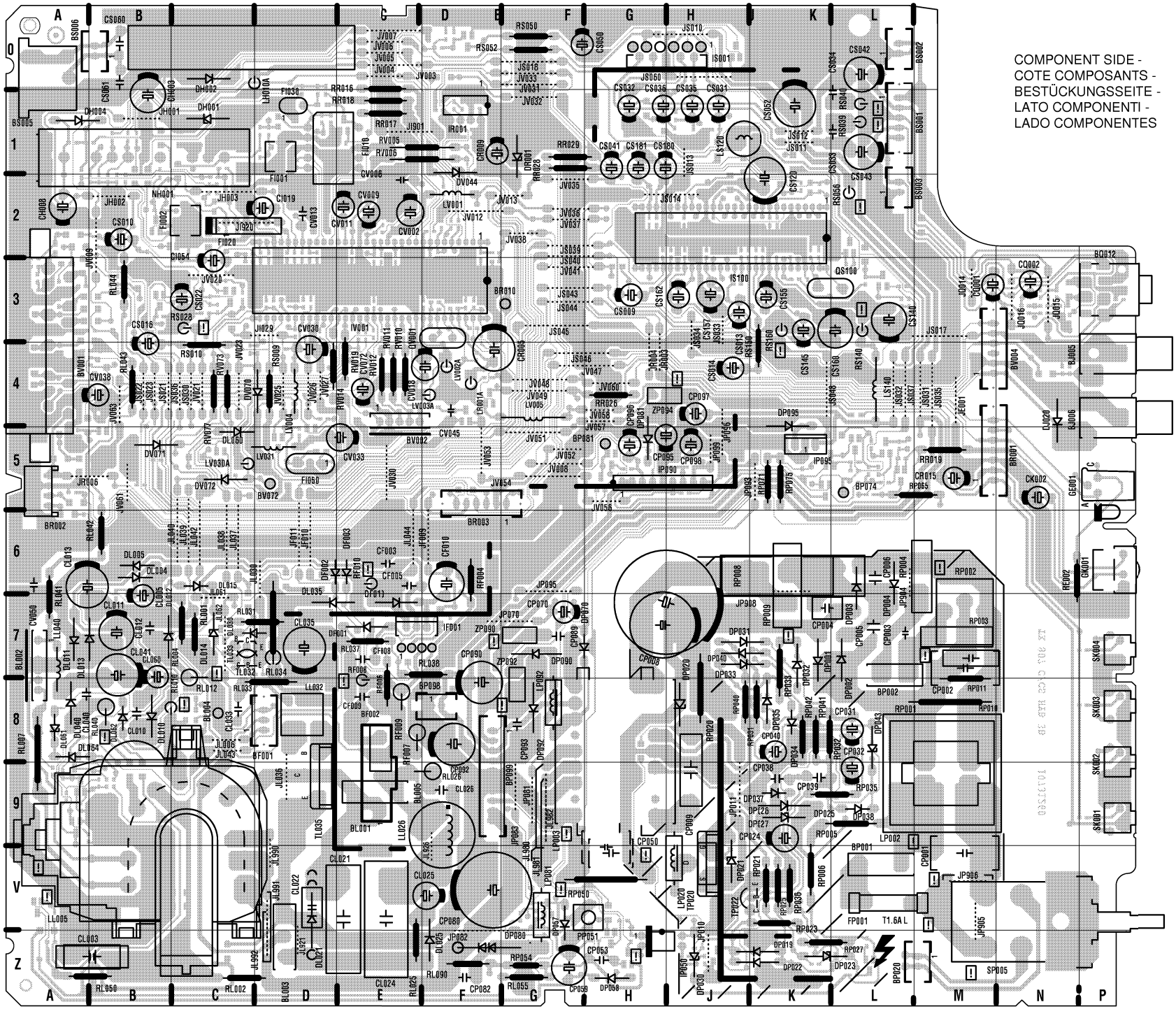

COMPONENT SIDE -
COTE COMPOSANTS -
BESTÜCKUNGSSEITE -
LATO COMPONENTI -
LADO COMPONENTES

TX807C/CS
Updated 10 / 01

MAIN BOARD - PLATINE PRINCIPALE - CHASSIS GRUNDPLATTE - PIASTRA PRINCIPALE - PLATINA PRINCIPAL

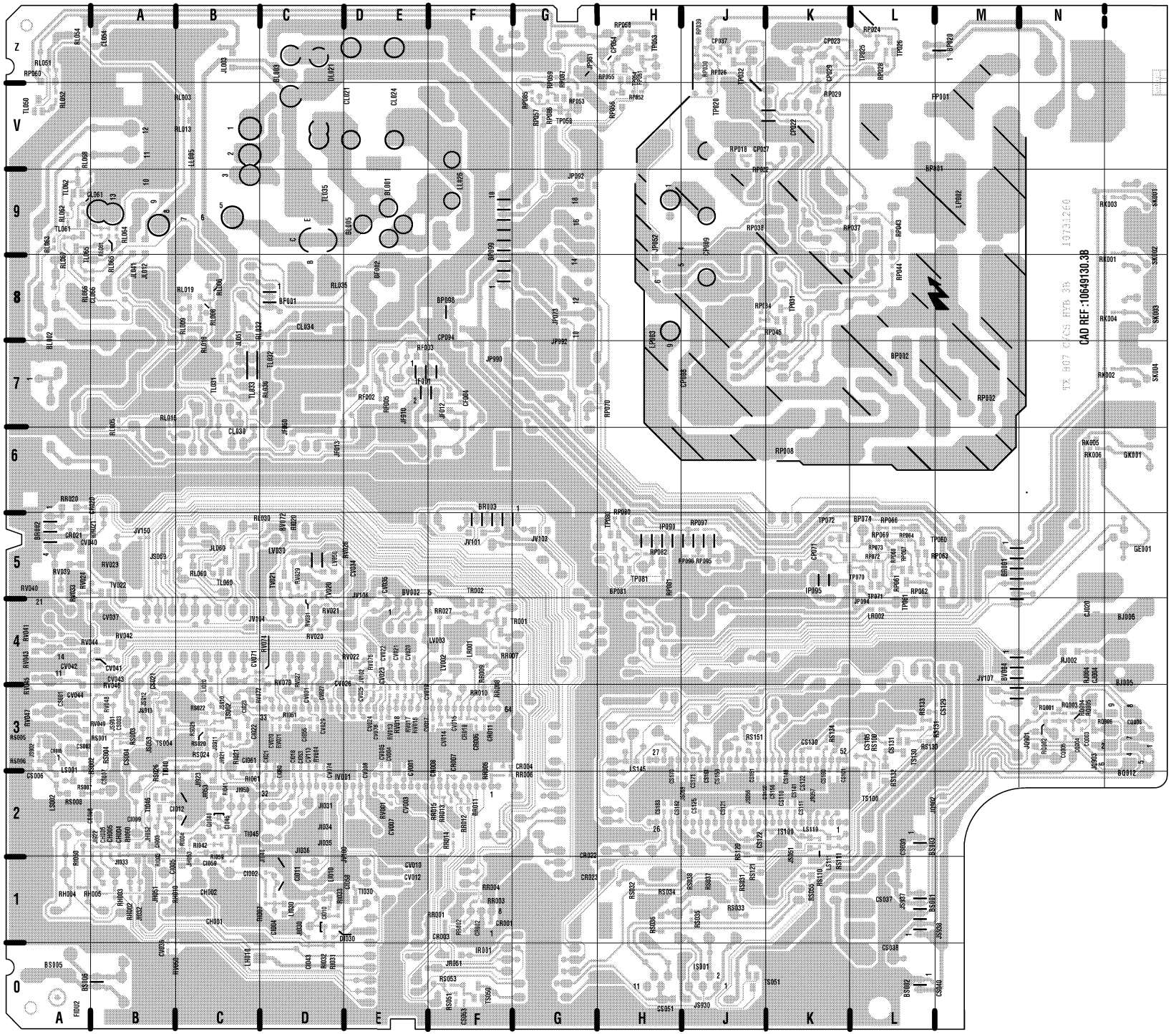

SOLDER SIDE -
CÔTE SOUDURES -
LÖTSEITE -
LATO SALDATURE -
LADO SOLDADURAS

TX807C/CS
Updated 10 / 01

VIDEO AMPLIFIER BOARD - PLATINE AMPLIFICATEURS VIDEO - VIDEOVERSTÄRKERPLATTE - PLATINA AMPLIFICADOR VIDEO - PIASTRA AMPLIFICATORE VIDEO
CRT 80000.00 - CRT 80001.00

COMPONENT SIDE - CÖTE COMPOSANTS - BESTÜCKUNGSSEITE - LATO COMPONENTI - LADO COMPONENTES

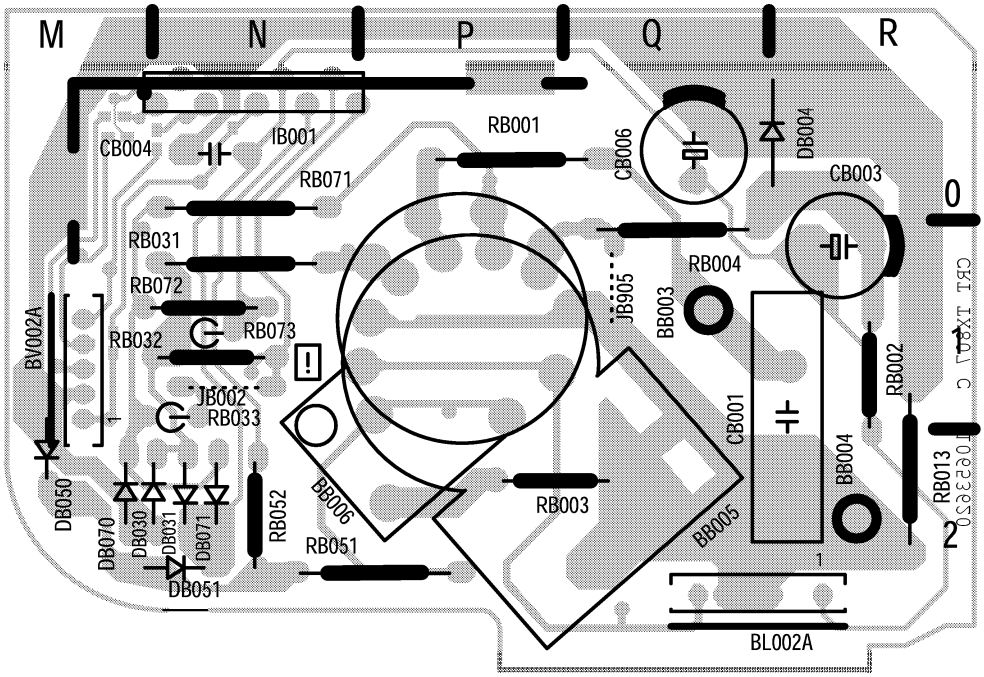

SOLDER SIDE - CÔTE SOUDURES - LÖTSEITE - LATO SALDATURE - LADO SOLDADURAS

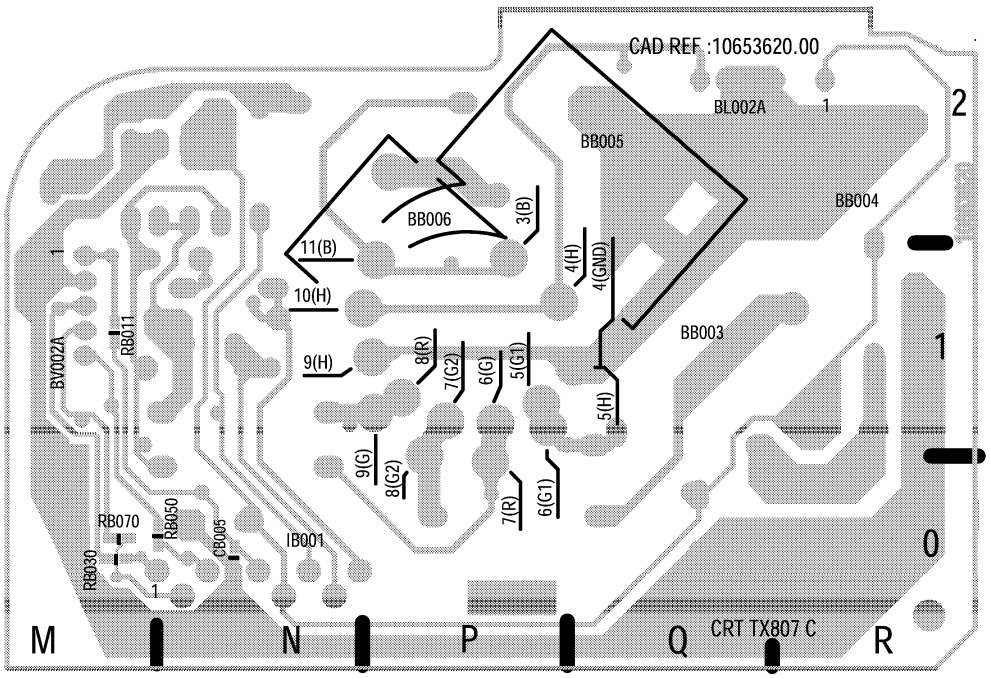

VIDEO AMPLIFIER BOARD - PLATINE AMPLIFICATEURS VIDEO - VIDEOVERSTÄRKERPLATTE - PIASTRA AMPLIFICATORE VIDEO - PLATINA AMPLIFICADOR VIDEO

COMPONENT SIDE - CÖTE COMPOSANTS - BESTÜCKUNGSSEITE - LATO COMPONENTI - LADO COMPONENTES

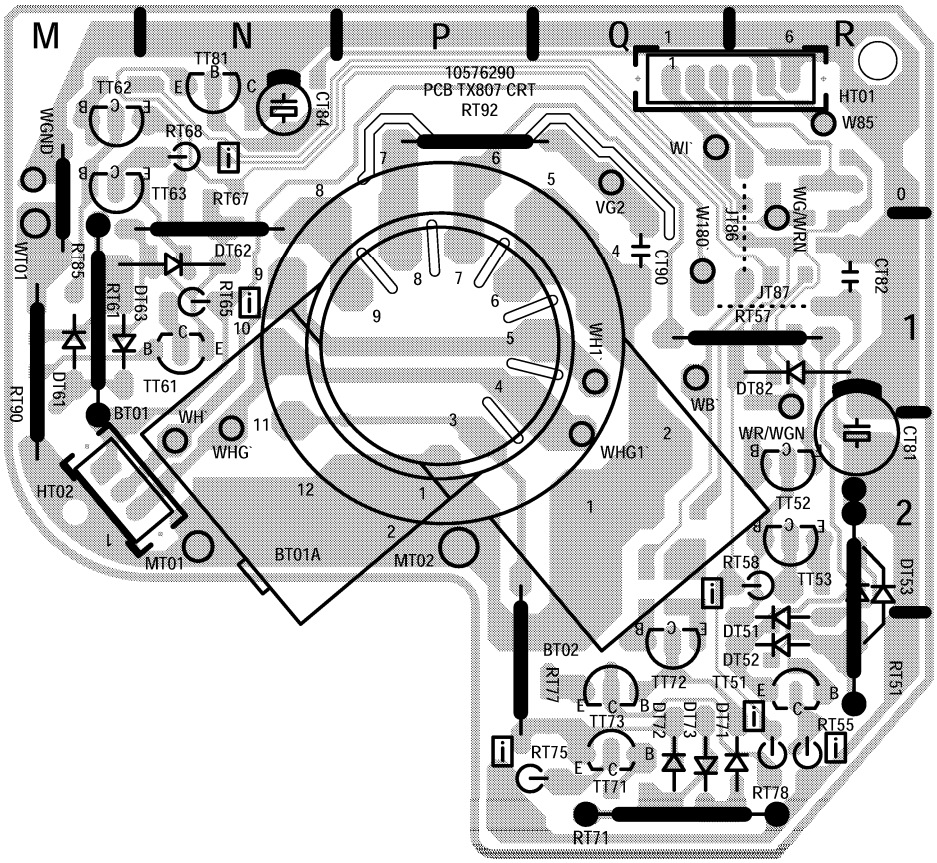

SOLDER SIDE - CÔTE SOUDURES - LÖTSEITE - LATO SALDATURE - LADO SOLDADURAS

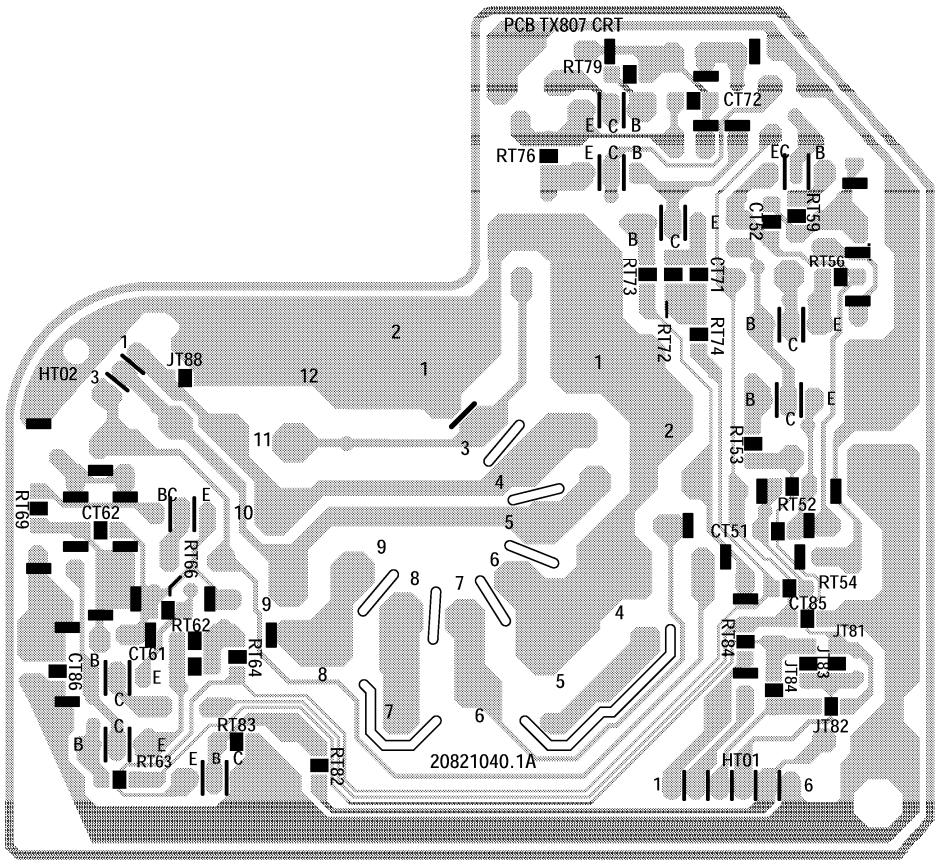

TX807
First issue 02 / 98

TELETEXT MODULE - MODULE TELETEXTE - VIDEOTEXT MODUL
MODULO TELEVIDEO - MODULO TELETEXTO

COMPONENT SIDE - CÖTE COMPOSANTS - BESTÜCKUNGSSEITE -
LATO COMPONENTI - LADO COMPONENTES

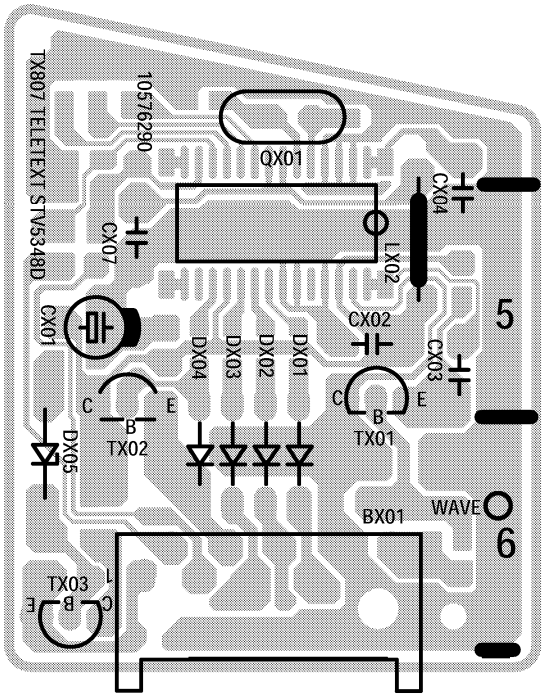

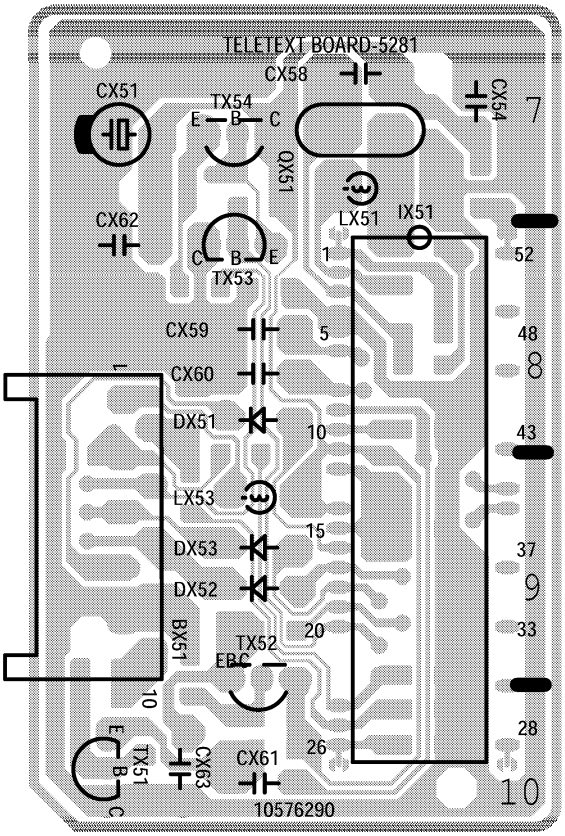

SOLDER SIDE - CÔTE SOUDURES - LÖTSEITE - LATO SALDATURE - LADO SOLDADURAS

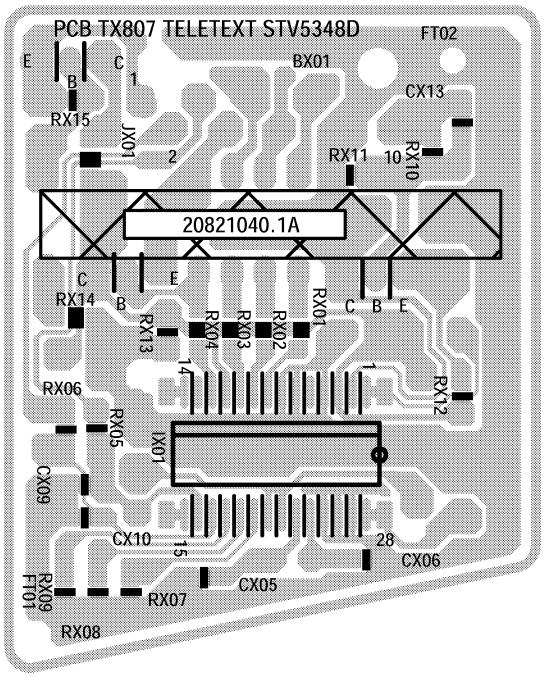

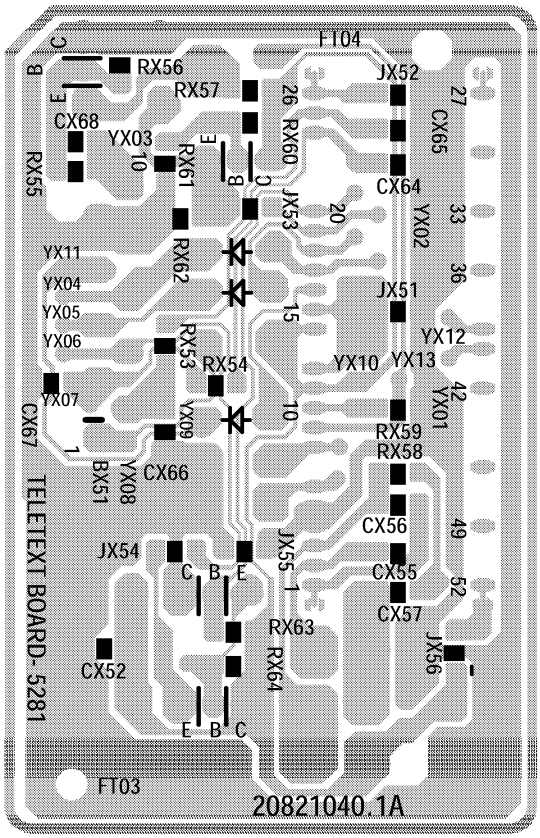

TX807
First issue 02 / 98